No. PE-TD27-ⅡE

TCM®

PARTS CATALOGUE

DIESEL ENGINE

TD27-Ⅱ

NISSAN DIESEL

APPLICABLE MODEL 適用機種		
E/G TYPE エンジンタイプ	Model 機種名	Symbol 記号
①	FD20C7	42F
	FD25C7	42K
	FD30C7	42P
	FD20T7	42G
	FD25T7	42L
	FD30T7	42R
	FD20W7	42S
	FD25W7	42T
	FD30W7	42U
②	FHD15C3	0J6
	FHD18C3	0J8
	FD20C3	2N0
	FD25C3	2N4
	FD30C3	2N8
	FD20C13	2M0
	FD25C13	2M4
	FHD15T3	0J7
	FHD18T3	0J9
	FD20T3	2N1
	FD25T3	2N5
	FD30T3	2N9
	FD20T13	2M1
	FD25T13	2M5
	FD20W3	2P0
	FD25W3	2P4
	FD30W3	2P8

TCM CORPORATION

ご使用のまえに

このパーツカタログは，TCM フォークリフト のエンジンの構成部品を収録しています。

部品ご注文について

部品ご注文の際は，必ず車両の形式・製造番号（号車），エンジンの形式・製造番号（号機），部品番号および注文数を明示してください。車両の製造番号（号車）は車両銘板に，エンジンの製造番号（号機）は，シリンダブロックに打刻で表示しています。

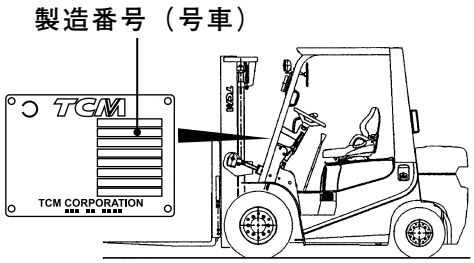

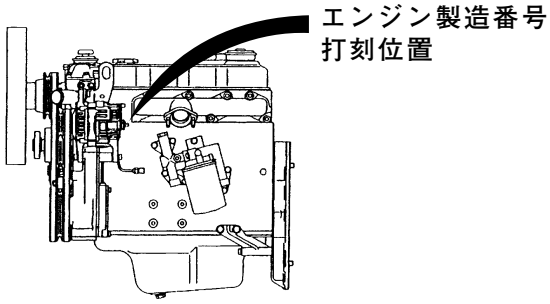

ご使用について

部品名称はわかっているが，部品番号を知りたいときは，……

→ 目次を見て，部番リストの図番号（FIG. No.）を見付けます。

組付け位置はわかっているが，部品番号を知りたいときは，……

→ 目次を見て，部番リストの図番号（FIG. No.）を見付けます。

→ イラストの確認，部品番号の検索，号車（号機）の確認をします。

→ 正確な部品番号，形状，名称や履歴がわかります。

略語および記号

ＡＳＳＹ	組立品を示します。
Ｏ．Ｓ．	オーバサイズ仕様部品を示します。
Ｕ．Ｓ．	アンダサイズ部品を示します。
ＳＴＤ	標準装備品を示します。
＊	セットおよびキットの販売部品を示します。
ＡＲ	必要に応じた数を使用します。
＋	図示していません。
ＦＲＯＮＴ	ファン側が前方であることを示します。
ｔ	厚みを示します。
ＧＲＤ	シリンダボディとライナの締め代グレードおよびライナとピストンのすき間グレードを示します。
ＯＣ	湿式クラッチ仕様を示します。
ＨＣＳ	高速ファン仕様を示します。
ＵＬ－ＤＳ	UL-DS仕様を示します。
24Ｖ(ＧＥ)	大容量ジェネレータ仕様を示します。

部品は，品質向上のため予告なく変更することがありますので，あらかじめご了承ください。

INTRODUCTION

This Parts Catalogue contains the component parts of the engine mounted on TCM FORKLIFT TRUCK.

How to order parts

When ordering, be sure to specify the model name and serial number (machine number), engine type and serial number (engine number) of your machine, as well as the part number and desired quantity for each part. The machine serial number (machine number) is indicated on the machine name plate, the engine serial number (engine number) is punched on the cylinder block.

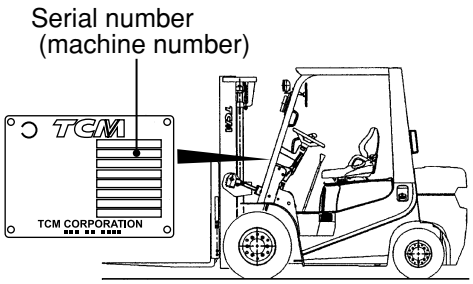

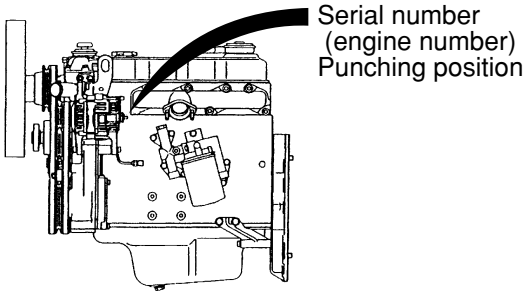

How to use the Parts Catalogue

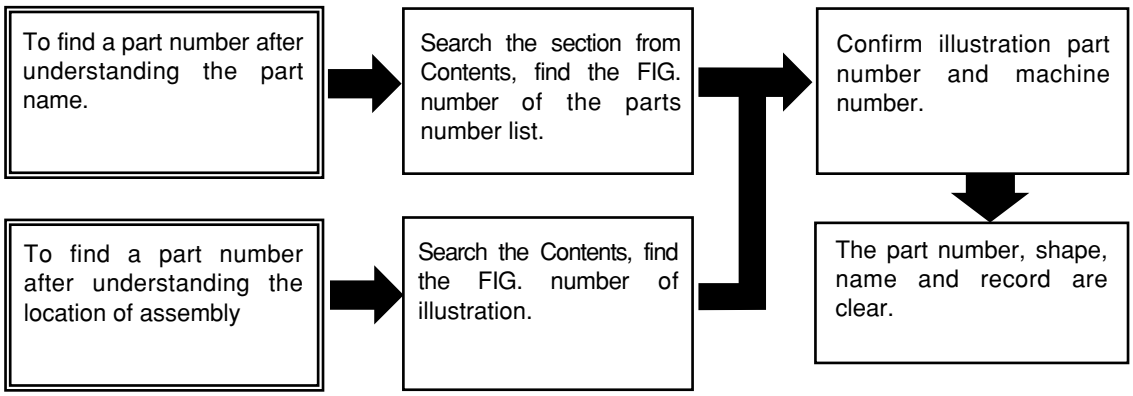

Abbreviations and symbols

ASSY ····· Assembled unit.
O.S. ····· Oversize.
U.S. ····· Undersize.
STD ····· Standard.
* ····· The marketable part set or kit.
AR ····· Quantity required.
FRONT ····· It is shown that a fan side is the forward.
t ····· Thickness.
GRD ····· The grade of the tightening allowance between a cylinder body and a liner and the grade of the clearance between a liner and a piston are shown. For parts replacement procedures, refer to the Shop Manual.
OC ····· Oil clutch specification are shown.
HCS ····· Hi-fan specification are shown.
UL-DS····· UL-DS specification are shown.
24V(GE)····· The specifications of the large-capacity generator are shown.

Materals and specifications subject to change without notice.

APPLICABLE MODEL
適用機種

TD27-Ⅱ

E/G TYPE エンジンタイプ	Model 機種名	Symbol 記号
A	FD20C7	42F
	FD25C7	42K
	FD30C7	42P
	FD20T7	42G
	FD25T7	42L
	FD30T7	42R
	FD20W7	42S
	FD25W7	42T
	FD30W7	42U
B	FHD15C3	0J6
	FHD18C3	0J8
	FD20C3	2N0
	FD25C3	2N4
	FD30C3	2N8
	FD20C13	2M0
	FD25C13	2M4
	FHD15T3	0J7
	FHD18T3	0J9
	FD20T3	2N1
	FD25T3	2N5
	FD30T3	2N9
	FD20T13	2M1
	FD25T13	2M5
	FD20W3	2P0
	FD25W3	2P4
	FD30W3	2P8

CONTENTS (1/2)
目　　次

A	FD20C7, FD20T7, FD20W7, FD25C7, FD25T7, FD25W7, FD30C7, FD30T7, FD30W7
B	FHD15C3, FHD15T3, FHD18C3, FHD18T3, FD20C3, FD20C13, FD20T3, FD20T13, FD20W3, FD25C3, FD25C13, FD25T3, FD25T13, FD25W3, FD30C3, FD30T3, FD30W3

SECTION	部　　門	FIG.No. 図番号
OVERHAUL KIT	オーバホールキット	1
ENGINE BODY	エンジン本体	
CYLINDER BLOCK	シリンダブロック	2
PISTON & CRANKSHAFT	ピストン＆クランクシャフト	3
FRONT COVER (A)	フロントカバー	4
FRONT COVER (B)	フロントカバー	5
OIL PAN (A)	オイルパン	6
OIL PAN (B)	オイルパン	7
FLYWHEEL & CRANK PULLEY (A)	フライホイール＆クランクプーリ	8
FLYWHEEL & CRANK PULLEY (B)	フライホイール＆クランクプーリ	9
FLYWHEEL HOUSING (A)	フライホイールハウジング	10
FLYWHEEL HOUSING (B)	フライホイールハウジング	11
HEAD & VALVE MECHANISM	ヘッド＆バルブメカニズム	
CYLINDER HEAD (A)	シリンダヘッド	12
CYLINDER HEAD (B)	シリンダヘッド	13
VALVE MECHANISM	バルブメカニズム	14
INLET & EXHAUST	インレット＆エキゾースト	
AIR INTAKE MANIFOLD	エアーインテークマニホールド	15
EXHAUST MANIFOLD (A)	エキゾーストマニホールド	16
EXHAUST MANIFOLD (B)	エキゾーストマニホールド	17
LUBRICATION	潤滑装置	
OIL PUMP & OIL FILTER (A)	オイルポンプ＆オイルフィルタ	18
OIL PUMP & OIL FILTER (B)	オイルポンプ＆オイルフィルタ	19
OIL COOLER	オイルクーラ	20
COOLING	冷却装置	
COOLING FAN (A)	クーリングファン	21
COOLING FAN (B)	クーリングファン	22
THERMOSTAT HOUSING	サーモスタットハウジング	23
FUEL	燃料装置	
FUEL PIPING	フューエルパイピング	24
NOZZLE & HOLDER(INNER PARTS)	ノズル＆ホルダ（インナパーツ）	25
FUEL INJECTION PUMP(FITTING PARTS) (A)	インジェクションポンプ（フィッティングパーツ）	26
FUEL INJECTION PUMP(FITTING PARTS) (B)	インジェクションポンプ（フィッティングパーツ）	27
FUEL INJECTION PUMP(INNER PARTS)(1/2) (FOR STD)(-732742)	インジェクションポンプ（インナパーツ）（ＳＴＤ用）	28
FUEL INJECTION PUMP(INNER PARTS)(1/2) (FOR STD & OC)(732743-)	インジェクションポンプ（インナパーツ）（ＳＴＤ＆ＯＣ用）	28A
FUEL INJECTION PUMP(INNER PARTS)(2/2) (FOR STD)(-732742)	インジェクションポンプ（インナパーツ）（ＳＴＤ用）	29
FUEL INJECTION PUMP(INNER PARTS)(2/2) (FOR STD & OC)(732743-)	インジェクションポンプ（インナパーツ）（ＳＴＤ＆ＯＣ用）	29A
FUEL FILTER(FITTING PARTS)	フューエルフィルタ（フィッティングパーツ）	30
FUEL FILTER(INNER PARTS)	フューエルフィルタ（インナパーツ）	31

CONTENTS (2/2)
目　　次

A	FD20C7, FD20T7, FD20W7, FD25C7, FD25T7, FD25W7, FD30C7, FD30T7, FD30W7

B	FHD15C3, FHD15T3, FHD18C3, FHD18T3, FD20C3, FD20C13, FD20T3, FD20T13, FD20W3, FD25C3, FD25C13, FD25T3, FD25T13, FD25W3, FD30C3, FD30T3, FD30W3

SECTION	部　門	FIG.No. 図番号
ELECTRICAL	エレクトリカル	
STARTER(FITTING PARTS) (A)	スタータ（フィッティングパーツ）	32
STARTER(FITTING PARTS) (B)	スタータ（フィッティングパーツ）	33
STARTER(INNER PARTS) (FOR STD & HCS & UL-DS) (A)	スタータ（インナパーツ）（ＳＴＤ＆ＨＣＳ＆ＵＬ-ＤＳ用）	34
STARTER(INNER PARTS) (FOR STD) (B)	スタータ（インナパーツ）（ＳＴＤ用）	35
GENERATOR(FITTING PARTS) (A)	ジェネレータ（フィッティングパーツ）	36
GENERATOR(FITTING PARTS) (B)	ジェネレータ（フィッティングパーツ）	37
GENERATOR(INNER PARTS) (FOR STD & OC & HCS)(751100-) (A)	ジェネレータ（インナパーツ）（ＳＴＤ＆ＯＣ＆ＨＣＳ用）	38
GENERATOR(INNER PARTS) (FOR STD & OC)(751100-) (B)	ジェネレータ（インナパーツ）（ＳＴＤ＆ＯＣ用）	39
GENERATOR(INNER PARTS) (FOR UL-DS) (A)	ジェネレータ（インナパーツ）（ＵＬ-ＤＳ用）	40
GENERATOR(INNER PARTS) (FOR 24V(GE)) (A)	ジェネレータ（インナパーツ）（24Ｖ(ＧＥ)用）	41
ELECTRICAL PARTS (A)	エレクトリカルパーツ	42
ELECTRICAL PARTS (B)	エレクトリカルパーツ	43
PARTS NUMBER INDEX	部品番号順索引表	1 ～ 5

FIG. 1 OVERHAUL KIT
オーバ゛ホールキット

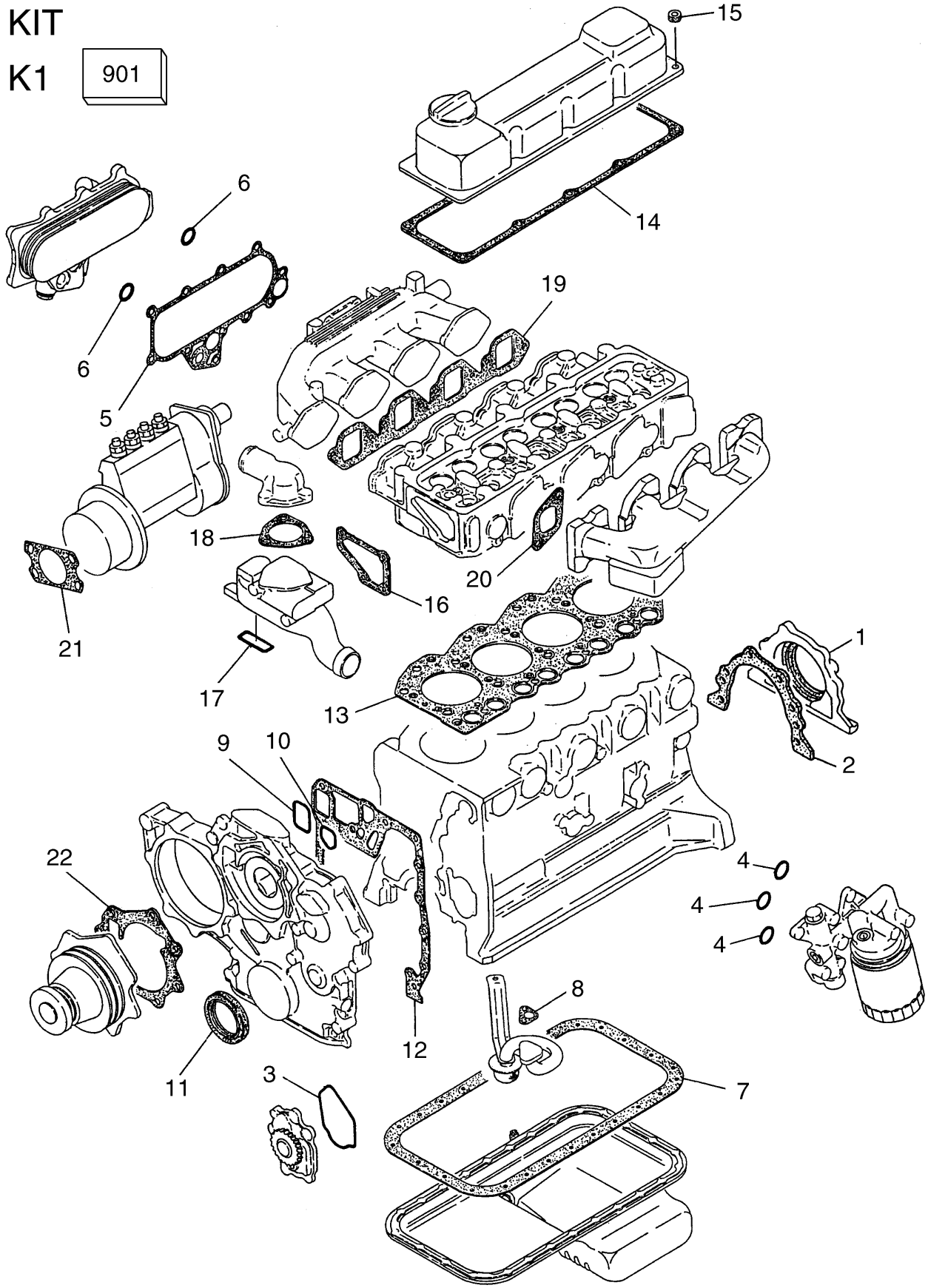

A	2t class	FD20C7, FD20T7, FD20W7, FD25C7, FD25T7, FD25W7,
	3t class	FD30C7, FD30T7, FD30W7,

B	1t class	FHD15C3, FHD15T3, FHD18C3, FHD18T3
	2t class	FD20C3, FD20C13, FD20T3, FD20T13, FD20W3, FD25C3, FD25C13, FD25T3, FD25T13, FD25W3
	3t class	FD30C3, FD30T3, FD30W3

FIG. 1

Item No. 見出番号	Part No. 部品番号	Mark 記号	Description 部品名称		Req'd 個数	Remarks : serial No. 備考：実施号車
901	A-10101-Z9826	K1	KIT,OVERHAUL	ｵｰﾊﾞﾎｰﾙｷｯﾄ	1	INC.1-22 & etc.
1	A-12279-43G05	*	SEAL,OIL	ｼｰﾙ	1	
2	A-12298-34N00	*	GASKET,RETAINER	ｶﾞｽｹｯﾄ	1	
3	A-15025-43G01	*	GASKET,OIL PUMP	ｶﾞｽｹｯﾄ	1	
4	A-21334-02N00	*	O RING,OIL FILTER	Oﾘﾝｸﾞ	3	
5	A-21304-34N00	*	GASKET,OIL COOLER	ｶﾞｽｹｯﾄ	1	
6	A-21334-02N00	*	O RING,OIL COOLER	Oﾘﾝｸﾞ	2	
7	A-11121-63G03	*	GASKET,OIL PAN	ｶﾞｽｹｯﾄ	1	
8	A-15053-80G00	*	GASKET,OIL STRAINER	ｶﾞｽｹｯﾄ	1	
9	A-14465-43G20	*	SEAL,RUBBER,FRONT	ｼｰﾙ	1	
10	A-14465-43G21	*	SEAL,RUBBER,FRONT	ｼｰﾙ	1	
11	A-13510-40K01	*	SEAL,OIL,FRONT	ｼｰﾙ	1	
12	A-13037-54T01	*	GASKET,FRONT PLATE	ｶﾞｽｹｯﾄ	1	
13	A-11044-43G01	*	GASKET,HEAD	ｶﾞｽｹｯﾄ	1	GRADE=1
14	A-13270-43G03	*	GASKET,ROCKER COVER	ｶﾞｽｹｯﾄ	1	
15	A-13268-29N00	*	WASHER,ROCKER COVER	ﾜｯｼｬ	10	
16	A-11072-34N02	*	GASKET,THERMO HOUSING	ｶﾞｽｹｯﾄ	1	
17	A-14465-43G02	*	SEAL,THERMO HOUSING	ｼｰﾙ	1	
18	A-11062-34N01	*	GASKET,WATER OUTLET	ｶﾞｽｹｯﾄ	1	
19	A-14035-31N00	*	GASKET,INLET MANIFOLD	ｶﾞｽｹｯﾄ	1	
20	A-14036-43G00	*	GASKET,EXHAUST MANIFOLD	ｶﾞｽｹｯﾄ	4	
21	A-16701-R8100	*	GASKET,INJECTION PUMP	ｶﾞｽｹｯﾄ	1	
22	A-21014-34N01	*	GASKET,WATER PUMP	ｶﾞｽｹｯﾄ	1	

FIG. 2 CYLINDER BLOCK
シリンダブロック

KIT

K1 901

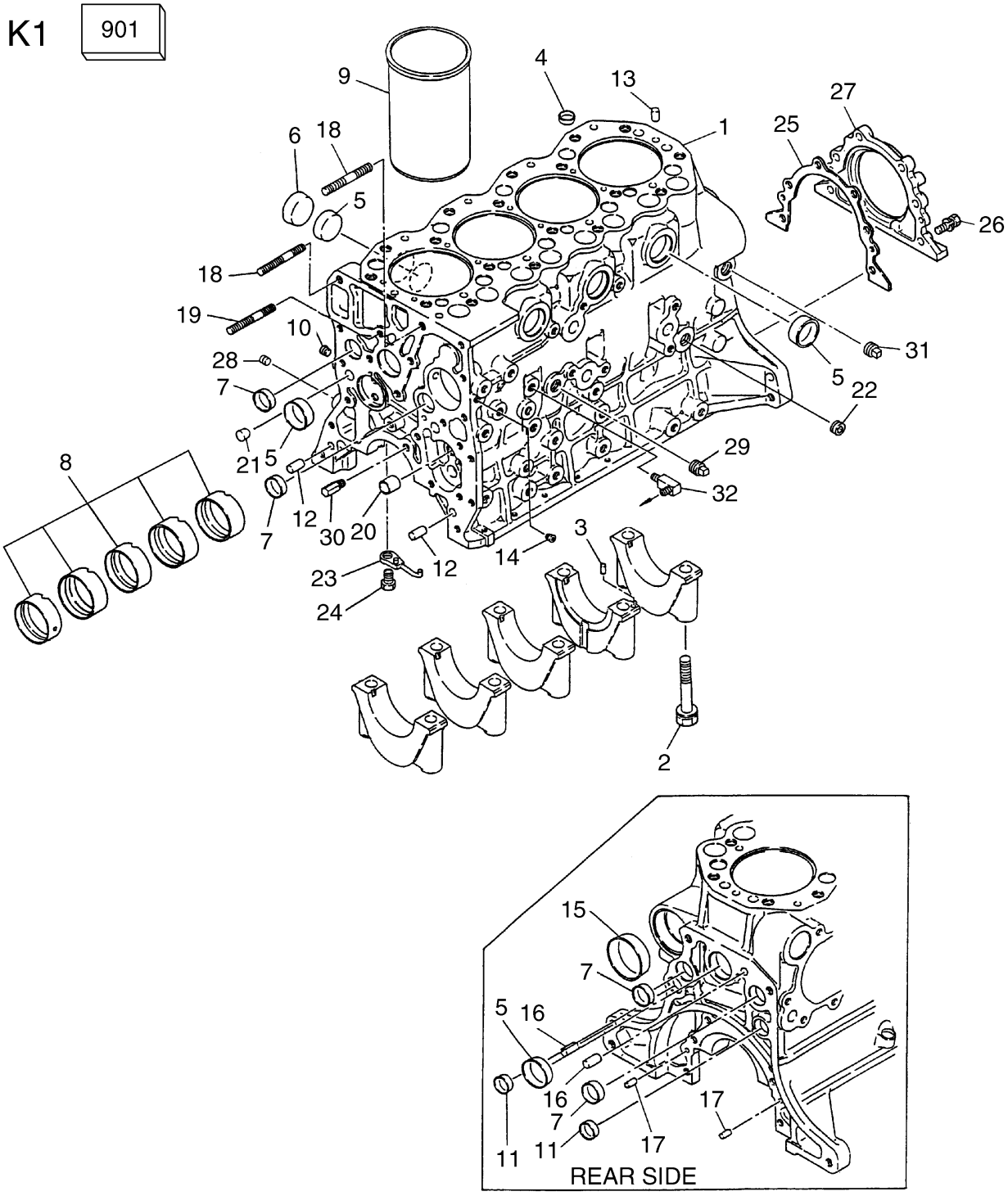

A	2t class	FD20C7, FD20T7, FD20W7, FD25C7, FD25T7, FD25W7,
	3t class	FD30C7, FD30T7, FD30W7,

B	1t class	FHD15C3, FHD15T3, FHD18C3, FHD18T3
	2t class	FD20C3, FD20C13, FD20T3, FD20T13, FD20W3, FD25C3, FD25C13, FD25T3, FD25T13, FD25W3
	3t class	FD30C3, FD30T3, FD30W3

FIG. 2

Item No. 見出番号	Part No. 部品番号	Mark 記号	Description 部品名称		Req'd 個数	Remarks : serial No. 備考：実施号車
A1	A-11009-40K01		CYLINDER BLOCK ASSY	ｼﾘﾝﾀﾞﾌﾞﾛｯｸｱｯｾﾝ	1	INC.1-22 -2003.7
-	A-11009-40K02		CYLINDER BLOCK ASSY	ｼﾘﾝﾀﾞﾌﾞﾛｯｸｱｯｾﾝ	1	INC.1-22 2003.8-
901	A-10101-Z9826	K1	KIT,OVERHAUL	ｵｰﾊﾞﾎｰﾙｷｯﾄ	1	INC.25,27 & etc.
1	NO PART NO.		BLOCK,CYLINDER	ﾌﾞﾛｯｸ	1	
2	A-12293-0W800		BOLT	ﾎﾞﾙﾄ	10	MINEBIA MAKE
-	A-12293-0W801		BOLT	ﾎﾞﾙﾄ	10	HAMANO MAKE
3	A-01522-05104		PIN,STRAIGHT	ﾋﾟﾝ	1	
4	A-01648-00224		PLUG,WELCH	ﾌﾟﾗｸﾞ	8	
5	A-01648-00084		PLUG,WELCH	ﾌﾟﾗｸﾞ	9	
6	A-01648-00154		PLUG,WELCH	ﾌﾟﾗｸﾞ	1	
7	A-01648-00024		PLUG,WELCH	ﾌﾟﾗｸﾞ	4	
8	A-13002-43G00		SET,BUSHING,CAM	ﾌﾞｯｼﾝｸﾞｾｯﾄ	1	STD -2003.7
-	A-13002-43G05		SET,BUSHING,CAM	ﾌﾞｯｼﾝｸﾞｾｯﾄ	1	STD 2003.8-
-	A-13003-43G01		SET,BUSHING,CAM	ﾌﾞｯｼﾝｸﾞｾｯﾄ	1	U.S.=0.25mm -2003.7
-	A-13003-43G06		SET,BUSHING,CAM	ﾌﾞｯｼﾝｸﾞｾｯﾄ	1	U.S.=0.25mm 2003.8-
-	A-13003-43G02		SET,BUSHING,CAM	ﾌﾞｯｼﾝｸﾞｾｯﾄ	1	U.S.=0.5mm -2003.7
-	A-13003-43G07		SET,BUSHING,CAM	ﾌﾞｯｼﾝｸﾞｾｯﾄ	1	U.S.=0.5mm 2003.8-
-	A-13003-43G03		SET,BUSHING,CAM	ﾌﾞｯｼﾝｸﾞｾｯﾄ	1	U.S.=0.75mm -2003.7
-	A-13003-43G08		SET,BUSHING,CAM	ﾌﾞｯｼﾝｸﾞｾｯﾄ	1	U.S.=0.75mm 2003.8-
9	A-11012-43G00		LINER,CYLINDER	ﾗｲﾅ	4	RIKEN MAKE
-	A-11012-43G10		LINER,CYLINDER	ﾗｲﾅ	4	KUBOTA MAKE
-	A-11012-2S000		LINER,CYLINDER	ﾗｲﾅ	4	TEIKOKU PISTONMAKE
10	A-01642-03004		PLUG,SCREW	ﾌﾟﾗｸﾞ	1	
11	A-01648-00224		PLUG,WELCH	ﾌﾟﾗｸﾞ	2	
12	A-30412-P5100		DOWEL	ﾀﾞｳｴﾙ	2	
13	A-11013-T9000		PIN,SPRING	ﾋﾟﾝ	2	
14	A-01642-03004		PLUG,SCREW	ﾌﾟﾗｸﾞ	1	
15	A-11019-90002		PLUG	ﾌﾟﾗｸﾞ	1	
16	A-30412-P5100		DOWEL	ﾀﾞｳｴﾙ	2	
17	A-12313-10600		PIN	ﾋﾟﾝ	2	
18	A-08227-08010		STUD	ｽﾀｯﾄﾞ	2	
19	A-15213-43G01		STUD	ｽﾀｯﾄﾞ	1	
20	A-15075-43G00		BUSHING,OIL PUMP	ﾌﾞｯｼﾝｸﾞ	1	
21	A-11024-54T00		PLUG,TAPER	ﾌﾟﾗｸﾞ	1	
22	A-08931-5081A		PLUG,TAPER	ﾌﾟﾗｸﾞ	1	
23	A-12124-43G02		JET,OIL	ｼﾞｪｯﾄ	4	
24	A-12123-Z5501		BOLT	ﾎﾞﾙﾄ	4	
25	A-12298-34N00	*	GASKET	ｶﾞｽｹｯﾄ	1	
26	A-08120-8251E		BOLT&WASHER	ﾎﾞﾙﾄ&ﾜｯｼｬ	6	
27	A-12279-43G05	*	SEAL,OIL	ｼｰﾙ	1	

FIG. 2 CYLINDER BLOCK
シリンダブロック

KIT

K1 901

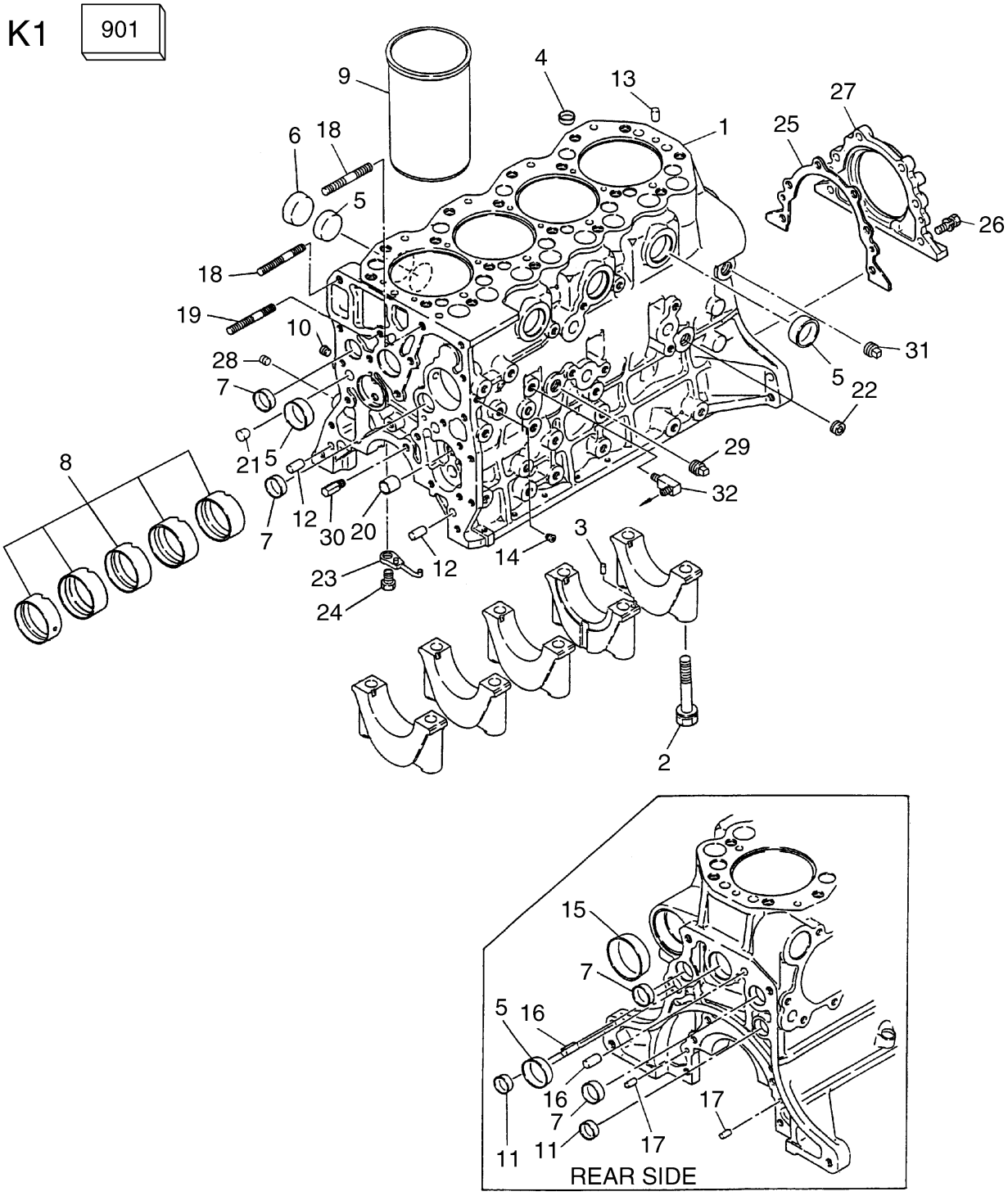

A	2t class	FD20C7, FD20T7, FD20W7, FD25C7, FD25T7, FD25W7,
	3t class	FD30C7, FD30T7, FD30W7,

B	1t class	FHD15C3, FHD15T3, FHD18C3, FHD18T3
	2t class	FD20C3, FD20C13, FD20T3, FD20T13, FD20W3, FD25C3, FD25C13, FD25T3, FD25T13, FD25W3
	3t class	FD30C3, FD30T3, FD30W3

FIG. 2

Item No. 見出番号	Part No. 部品番号	Mark 記号	Description 部品名称		Req'd 個数	Remarks : serial No. 備考：実施号車
28	A-01642-03004		PLUG,SCREW	ﾌﾟﾗｸﾞ	1	
29	A-11021-J2000		PLUG,TAPER	ﾌﾟﾗｸﾞ	1	
30	A-13081-40K00		JET,OIL	ｼﾞｪｯﾄ	1	
31	A-11021-J2000		PLUG,TAPER	ﾌﾟﾗｸﾞ	1	
32	A-15191-41K01		CONNECTOR	ｺﾈｸﾀ	1	

FIG. 3 PISTON & CRANKSHAFT
ﾋﾟｽﾄﾝ&ｸﾗﾝｸｼｬﾌﾄ

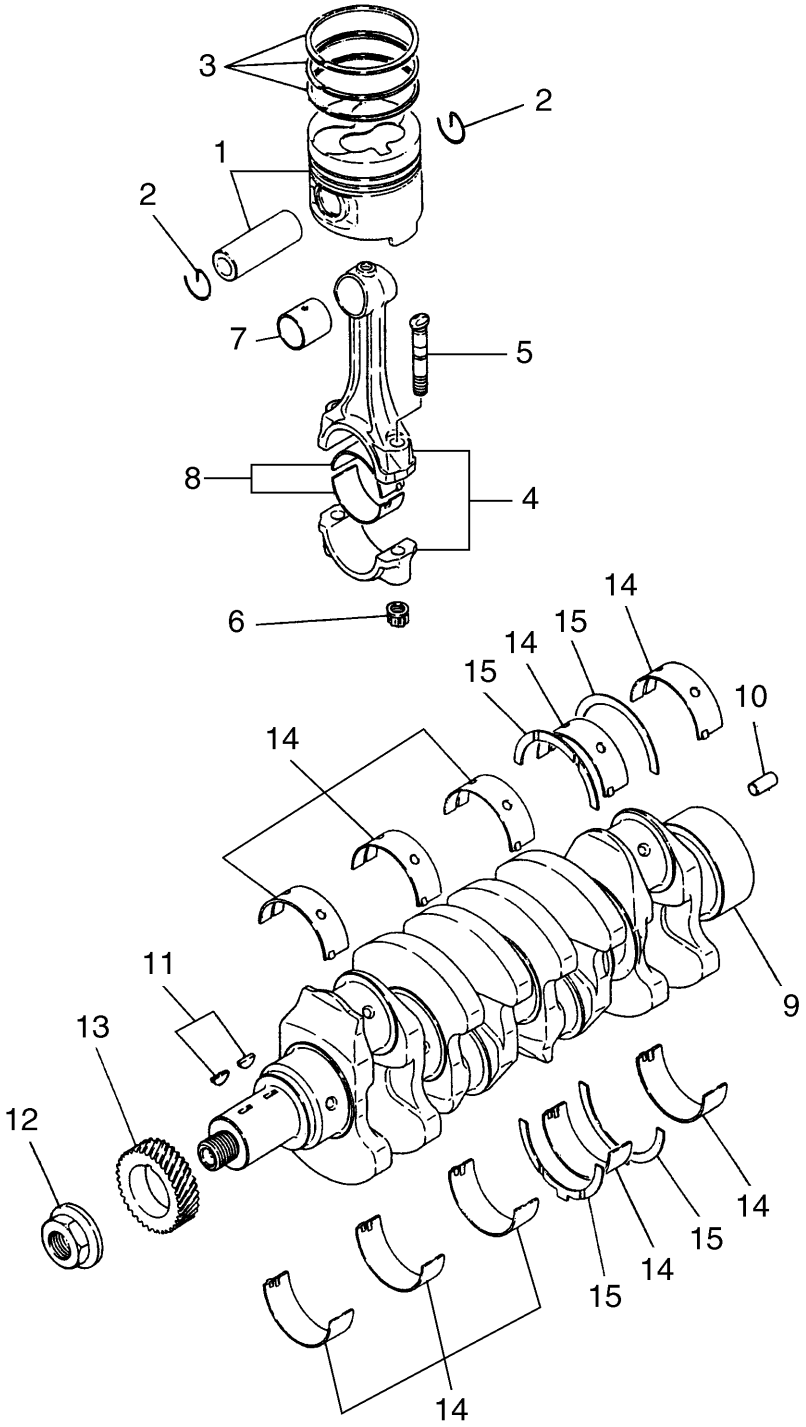

⚠ In the case of exchange of a piston, please order parts after checking the grade number of the piston stamped on the cylinder block.
ピストンの交換の際はシリンダブロックに刻印されているピストンのグレードナンバーを確認してから部品を注文して下さい。

A	2t class	FD20C7, FD20T7, FD20W7, FD25C7, FD25T7, FD25W7,
	3t class	FD30C7, FD30T7, FD30W7,

B	1t class	FHD15C3, FHD15T3, FHD18C3, FHD18T3
	2t class	FD20C3, FD20C13, FD20T3, FD20T13, FD20W3, FD25C3, FD25C13, FD25T3, FD25T13, FD25W3
	3t class	FD30C3, FD30T3, FD30W3

FIG. 3

Item No. 見出番号	Part No. 部品番号	Mark 記号	Description 部品名称		Req'd 個数	Remarks : serial No. 備考：実施号車
1	A-12010-6T005		PISTON & PIN	ﾋﾟｽﾄﾝ&ﾋﾟﾝ	4	INC.2 GRADE=1
-	A-12010-6T015		PISTON & PIN	ﾋﾟｽﾄﾝ&ﾋﾟﾝ	4	INC.2 GRADE=2
2	A-12032-54T00		RING,SNAP	ﾘﾝｸﾞ	8	
3	A-12033-6T011		SET,RING,PISTON	ﾘﾝｸﾞｾｯﾄ	1	
4	A-12100-0W802		ROD,CONNECTING	ﾛｯﾄﾞ	4	INC.5-7
5	A-12109-43G00		BOLT	ﾎﾞﾙﾄ	8	
6	A-12112-43G00		NUT	ﾅｯﾄ	8	
7	A-12030-31N00		BUSHING	ﾌﾞｯｼﾝｸﾞ	4	
8	A-12111-2W200		METAL,SHELL	ﾒﾀﾙ	8	STD
-	A-12117-2W200		METAL,SHELL	ﾒﾀﾙ	8	U.S.=0.25mm
-	A-12118-2W200		METAL,SHELL	ﾒﾀﾙ	8	U.S.=0.5mm
-	A-12119-2W200		METAL,SHELL	ﾒﾀﾙ	8	U.S.=0.75mm
-	A-12120-2W200		METAL,SHELL	ﾒﾀﾙ	8	U.S.=1.0mm
9	A-12200-6T002		CRANK SHAFT	ｸﾗﾝｸｼｬﾌﾄ	1	
10	A-01522-10224		PIN,STRAIGHT	ﾋﾟﾝ	1	
11	A-12205-76200		KEY,CRANK	ｷｰ	2	
12	A-12309-62503		NUT	ﾅｯﾄ	1	
13	A-13021-43G01		GEAR,CRANK	ｷﾞﾔｰ	1	
14	A-12207-2W211		SET,METAL,SHELL	ﾒﾀﾙｾｯﾄ	1	STD
-	A-12209-2W211		SET,METAL,SHELL	ﾒﾀﾙｾｯﾄ	1	U.S.=0.25mm
-	A-12210-2W211		SET,METAL,SHELL	ﾒﾀﾙｾｯﾄ	1	U.S.=0.5mm
-	A-12211-2W211		SET,METAL,SHELL	ﾒﾀﾙｾｯﾄ	1	U.S.=0.75mm
-	A-12212-2W211		SET,METAL,SHELL	ﾒﾀﾙｾｯﾄ	1	U.S.=1.0mm
15	A-12280-37525		SET,WASHER,THRUST	ﾜｯｼｬｾｯﾄ	1	SIZE=a t=2.275-2.325mm
-	A-12280-37526		SET,WASHER,THRUST	ﾜｯｼｬｾｯﾄ	1	SIZE=b t=2.3-2.35mm
-	A-12280-37527		SET,WASHER,THRUST	ﾜｯｼｬｾｯﾄ	1	SIZE=c t=2.325-2.375mm
-	A-12280-37528		SET,WASHER,THRUST	ﾜｯｼｬｾｯﾄ	1	O.S.=0.2mm t=2.475-2.525mm
-	A-12280-37529		SET,WASHER,THRUST	ﾜｯｼｬｾｯﾄ	1	O.S.=0.4mm t=2.675-2.725mm

FIG. 4 FRONT COVER (A)
フロントカバー

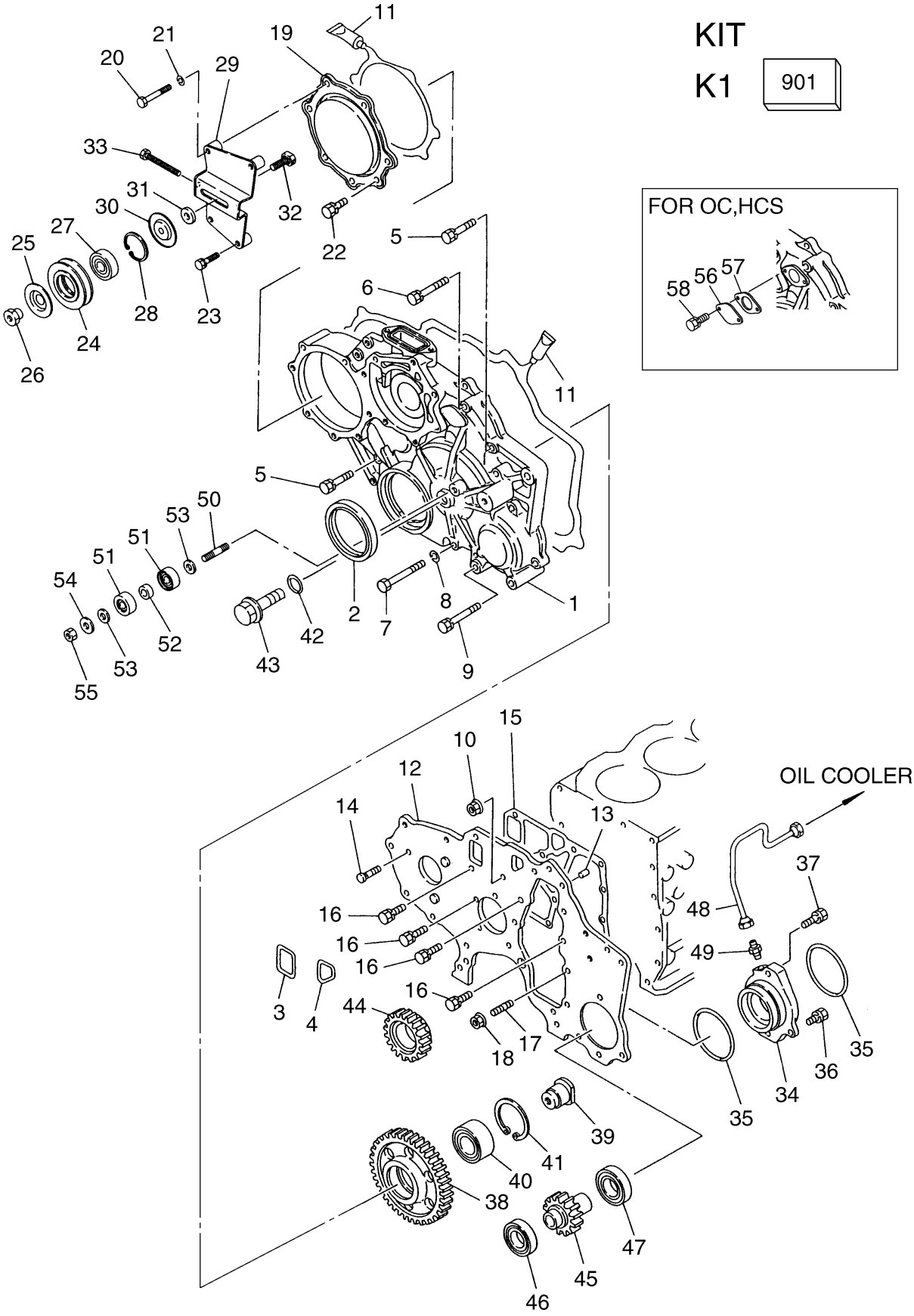

A	2t class	FD20C7, FD20T7, FD20W7, FD25C7, FD25T7, FD25W7,
	3t class	FD30C7, FD30T7, FD30W7,

B	1t class	FHD15C3, FHD15T3, FHD18C3, FHD18T3
	2t class	FD20C3, FD20C13, FD20T3, FD20T13, FD20W3, FD25C3, FD25C13, FD25T3, FD25T13, FD25W3
	3t class	FD30C3, FD30T3, FD30W3

FIG. 4

Item No. 見出番号	Part No. 部品番号	Mark 記号	Description 部品名称		Req'd 個数	Remarks : serial No. 備考：実施号車
901	A-10101-Z9826	K1	KIT,OVERHAUL	ｵｰﾊﾞｰﾎｰﾙｷｯﾄ	1	A
						INC.2-4,15 & etc.
1	A-13034-6K202		CASE,GEAR	ｹｰｽ	1	A
						STD,UL-DS,24V(GE)
						1t class
-	A-13034-41K01		CASE,GEAR	ｹｰｽ	1	A
						STD,UL-DS,24V(GE)
						2t,3t class
-	A-13034-NA002		CASE,GEAR	ｹｰｽ	1	A
						OC,HCS
2	A-13510-40K01	*	SEAL,OIL	ｼｰﾙ	1	A
3	A-14465-43G20	*	SEAL,RUBBER	ｼｰﾙ	1	A
4	A-14465-43G21	*	SEAL,RUBBER	ｼｰﾙ	1	A
5	A-08120-8451E		BOLT&WASHER	ﾎﾞﾙﾄ&ﾜｯｼｬ	4	A
6	A-08120-8651E		BOLT&WASHER	ﾎﾞﾙﾄ&ﾜｯｼｬ	1	A
7	A-08120-8851A		BOLT	ﾎﾞﾙﾄ	1	A
8	A-08915-1381A		WASHER	ﾜｯｼｬ	1	A
9	A-08120-8701E		BOLT&WASHER	ﾎﾞﾙﾄ&ﾜｯｼｬ	1	A
10	A-16132-43G00		NUT	ﾅｯﾄ	1	A
11	A-11121-38U00		GASKET,LIQUID	ｶﾞｽｹｯﾄ	AR	A
12	A-13031-5K400		PLATE,FRONT	ﾌﾟﾚｰﾄ	1	A
						INC.13,14
						1t class
-	A-13031-41K00		PLATE,FRONT	ﾌﾟﾚｰﾄ	1	A
						INC.13,14
						2t,3t class
13	A-12313-40K00		PIN,DOWEL	ﾋﾟﾝ	1	A
14	A-16702-76200		BOLT	ﾎﾞﾙﾄ	3	A
15	A-13037-54T01	*	GASKET	ｶﾞｽｹｯﾄ	1	A
16	A-08120-8161E		BOLT&WASHER	ﾎﾞﾙﾄ&ﾜｯｼｬ	9	A
17	A-08223-81810		STUD	ｽﾀｯﾄﾞ	2	A
18	A-08911-1081G		NUT&WASHER	ﾅｯﾄ&ﾜｯｼｬ	2	A
19	A-13560-54T00		COVER,DUST	ｶﾊﾞｰ	1	A
20	A-08120-8901A		BOLT	ﾎﾞﾙﾄ	2	A
21	A-08915-1381A		WASHER	ﾜｯｼｬ	2	A
22	A-08120-8161E		BOLT&WASHER	ﾎﾞﾙﾄ&ﾜｯｼｬ	6	A
23	A-08120-8401E		BOLT&WASHER	ﾎﾞﾙﾄ&ﾜｯｼｬ	2	A
A1	A-11925-NA000		PULLEY ASSY,IDLER	ﾌﾟｰﾘｱｯｾﾝ	1	A
						INC.24-33
A2	A-23150-43G01		PULLEY ASSY	ﾌﾟｰﾘｱｯｾﾝ	1	A
						INC.24-28
24	A-23151-43G00		PULLEY,IDLER	ﾌﾟｰﾘ	1	A
25	A-11915-J5501		COVER,DUST	ｶﾊﾞｰ	1	A
26	A-11927-Y7500		SHAFT,CENTER	ｼｬﾌﾄ	1	A
27	A-21035-65N00		BEARING	ﾍﾞｱﾘﾝｸﾞ	1	A
28	A-00922-24700		RING,SNAP	ﾘﾝｸﾞ	1	A
29	A-11926-NA000		BRACKET,PULLEY	ﾌﾞﾗｹｯﾄ	1	A
30	A-11915-J5502		COVER,DUST	ｶﾊﾞｰ	1	A
31	A-33023-90000		SPACER	ｽﾍﾟｰｻ	1	A
32	A-69763-10G01		SHAFT	ｼｬﾌﾄ	1	A

FIG. 4 FRONT COVER (A)
フロントカバー

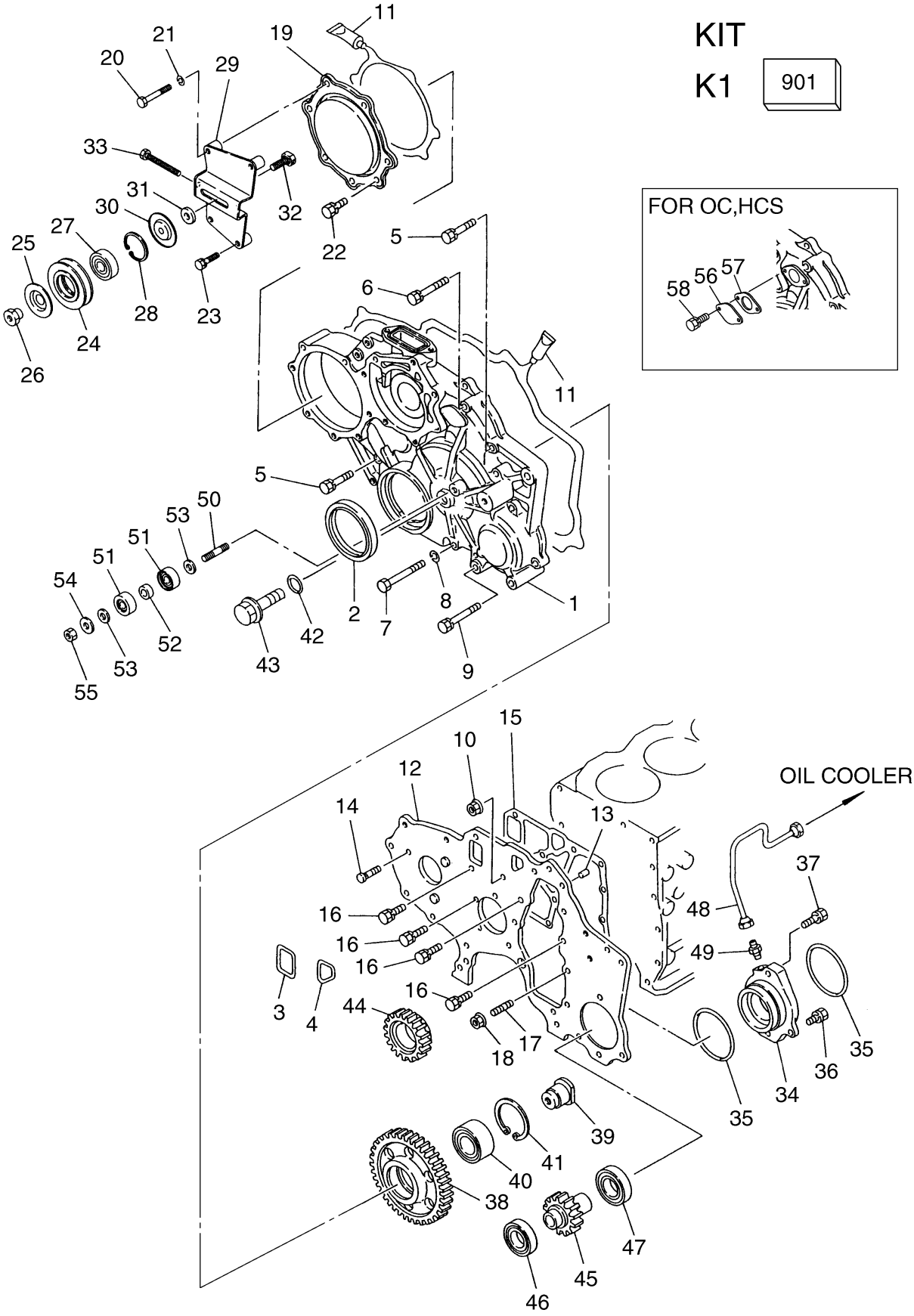

A	2t class	FD20C7, FD20T7, FD20W7, FD25C7, FD25T7, FD25W7,
	3t class	FD30C7, FD30T7, FD30W7,

B	1t class	FHD15C3, FHD15T3, FHD18C3, FHD18T3
	2t class	FD20C3, FD20C13, FD20T3, FD20T13, FD20W3, FD25C3, FD25C13, FD25T3, FD25T13, FD25W3
	3t class	FD30C3, FD30T3, FD30W3

FIG. 4

Item No. 見出番号	Part No. 部品番号	Mark 記号	Description 部品名称		Req'd 個数	Remarks : serial No. 備考：実施号車
33	A-01111-16144		BOLT,ADJUST	ﾎﾞﾙﾄ	1	A
34	A-69190-41K01		BRACKET,PUMP	ﾌﾞﾗｹｯﾄ	1	A
35	A-69170-L1400		O RING	Oﾘﾝｸﾞ	2	A
36	A-08120-8301E		BOLT&WASHER	ﾎﾞﾙﾄ&ﾜｯｼｬ	1	A
37	A-08121-0501E		BOLT&WASHER	ﾎﾞﾙﾄ&ﾜｯｼｬ	2	A
38	A-13014-41K00		GEAR,IDLER	ｷﾞﾔｰ	1	A
39	A-13016-41K00		SHAFT	ｼｬﾌﾄ	1	A
40	A-33379-40K00		BEARING	ﾍﾞｱﾘﾝｸﾞ	1	A
41	A-00922-26200		RING,SNAP	ﾘﾝｸﾞ	1	A
42	A-01001-20024		O RING	Oﾘﾝｸﾞ	1	A
43	A-01125-00104		BOLT&WASHER	ﾎﾞﾙﾄ&ﾜｯｼｬ	1	A
44	A-13021-40K00		GEAR,IDLER	ｷﾞﾔｰ	1	A
45	A-33320-40K00		GEAR,OUTPUT	ｷﾞﾔｰ	1	A
46	A-01011-00074		BEARING	ﾍﾞｱﾘﾝｸﾞ	1	A
47	A-33378-40K00		BEARING	ﾍﾞｱﾘﾝｸﾞ	1	A
48	A-15192-41K01		TUBE,OIL	ﾁｭｰﾌﾞ	1	A
49	A-01612-11134		CONNECTOR	ｺﾈｸﾀ	1	A
50	A-14065-41K00		STUD	ｽﾀｯﾄﾞ	1	A
51	A-11914-41K00		BUSHING	ﾌﾞｯｼﾝｸﾞ	2	A
52	A-01931-00394		SPACER	ｽﾍﾟｰｻ	1	A
53	A-08915-4401A		WASHER	ﾜｯｼｬ	2	A
54	A-21113-90003		WASHER	ﾜｯｼｬ	1	A
55	A-08911-2401A		NUT	ﾅｯﾄ	1	A
56	A-13040-09W00		COVER,PLATE	ｶﾊﾞｰ	1	A
						OC,HCS
57	A-13039-34N00		GASKET	ｶﾞｽｹｯﾄ	1	A
						OC,HCS
58	A-08120-61633		BOLT	ﾎﾞﾙﾄ	1	A
						OC,HCS

FIG. 5 FRONT COVER (B)
フロントカバー

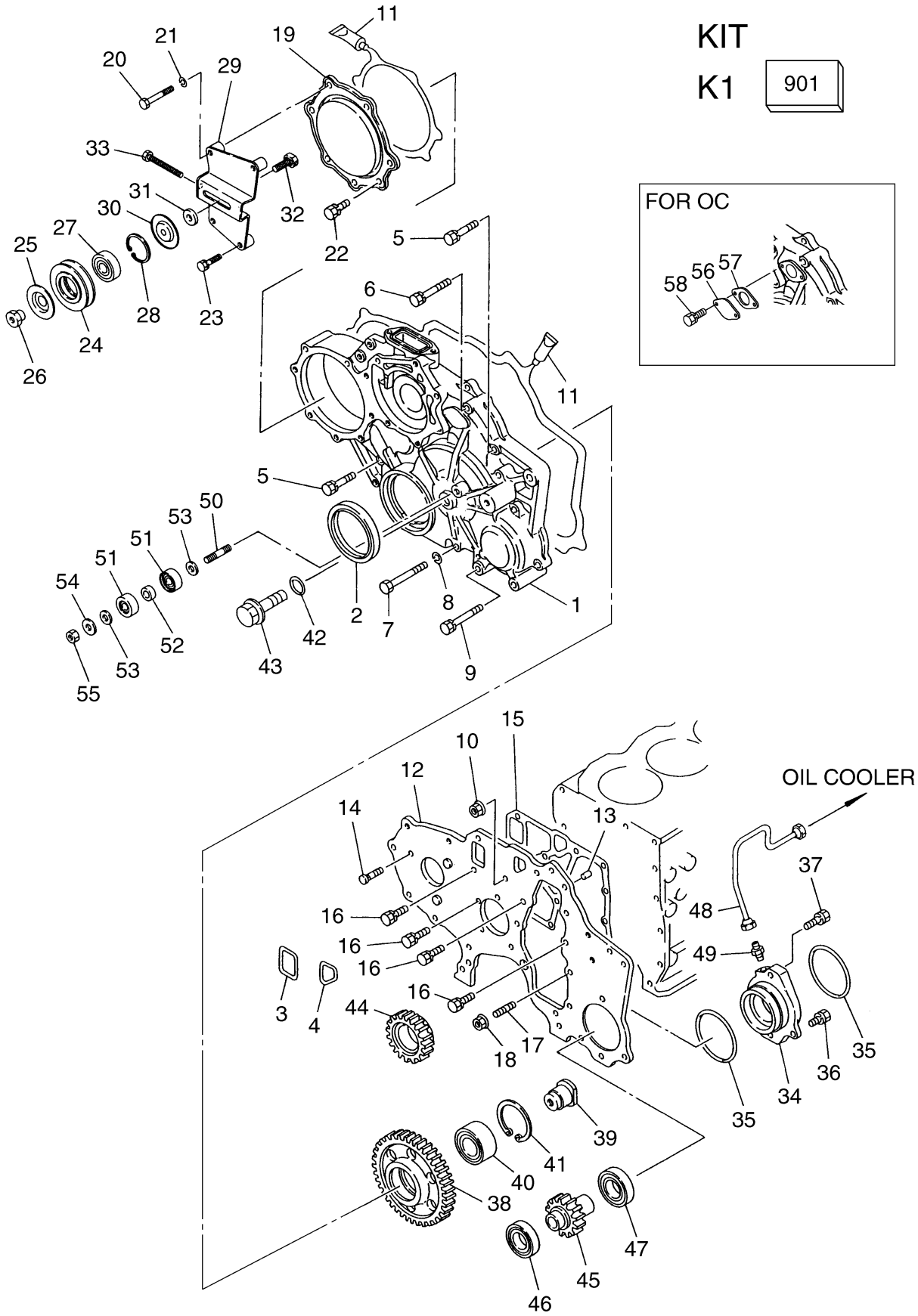

A	2t class	FD20C7, FD20T7, FD20W7, FD25C7, FD25T7, FD25W7,
	3t class	FD30C7, FD30T7, FD30W7,

B	1t class	FHD15C3, FHD15T3, FHD18C3, FHD18T3
	2t class	FD20C3, FD20C13, FD20T3, FD20T13, FD20W3, FD25C3, FD25C13, FD25T3, FD25T13, FD25W3
	3t class	FD30C3, FD30T3, FD30W3

FIG. 5

Item No. 見出番号	Part No. 部品番号	Mark 記号	Description 部品名称		Req'd 個数	Remarks : serial No. 備考：実施号車
901	A-10101-Z9826	K1	KIT,OVERHAUL	ｵｰﾊﾞﾎｰﾙｷｯﾄ	1	B
						INC.2-4,15 & etc.
1	A-13034-6K202		CASE,GEAR	ｹｰｽ	1	B
						1t class
						STD
-	A-13034-41K01		CASE,GEAR	ｹｰｽ	1	B
						2t,3t class
						STD
-	A-13034-NA002		CASE,GEAR	ｹｰｽ	1	B
						OC
2	A-13510-40K01	*	SEAL,OIL	ｼｰﾙ	1	B
3	A-14465-43G20	*	SEAL,RUBBER	ｼｰﾙ	1	B
4	A-14465-43G21	*	SEAL,RUBBER	ｼｰﾙ	1	B
5	A-08120-8451E		BOLT&WASHER	ﾎﾞﾙﾄ&ﾜｯｼｬ	4	B
6	A-08120-8651E		BOLT&WASHER	ﾎﾞﾙﾄ&ﾜｯｼｬ	1	B
7	A-08120-8851A		BOLT	ﾎﾞﾙﾄ	1	B
8	A-08915-1381A		WASHER	ﾜｯｼｬ	1	B
9	A-08120-8701E		BOLT&WASHER	ﾎﾞﾙﾄ&ﾜｯｼｬ	1	B
10	A-16132-43G00		NUT	ﾅｯﾄ	1	B
11	A-11121-38U00		GASKET,LIQUID	ｶﾞｽｹｯﾄ	AR	B
12	A-13031-5K400		PLATE,FRONT	ﾌﾟﾚｰﾄ	1	B
						INC.13,14
						1t class
-	A-13031-41K00		PLATE,FRONT	ﾌﾟﾚｰﾄ	1	B
						INC.13,14
						2t,3t class
13	A-12313-40K00		PIN,DOWEL	ﾋﾟﾝ	1	B
14	A-16702-76200		BOLT	ﾎﾞﾙﾄ	3	B
15	A-13037-54T01	*	GASKET	ｶﾞｽｹｯﾄ	1	B
16	A-08120-8161E		BOLT&WASHER	ﾎﾞﾙﾄ&ﾜｯｼｬ	9	B
17	A-08223-81810		STUD	ｽﾀｯﾄﾞ	2	B
18	A-08911-1081G		NUT&WASHER	ﾅｯﾄ&ﾜｯｼｬ	2	B
19	A-13560-54T00		COVER,DUST	ｶﾊﾞｰ	1	B
20	A-08120-8901A		BOLT	ﾎﾞﾙﾄ	2	B
21	A-08915-1381A		WASHER	ﾜｯｼｬ	2	B
22	A-08120-8161E		BOLT&WASHER	ﾎﾞﾙﾄ&ﾜｯｼｬ	6	B
23	A-08120-8401E		BOLT&WASHER	ﾎﾞﾙﾄ&ﾜｯｼｬ	2	B
A1	A-11925-NA000		PULLEY ASSY,IDLER	ﾌﾟｰﾘｱｯｾﾝ	1	B
						INC.24-33
A2	A-23150-43G01		PULLEY ASSY	ﾌﾟｰﾘｱｯｾﾝ	1	B
						INC.24-28
24	A-23151-43G00		PULLEY,IDLER	ﾌﾟｰﾘ	1	B
25	A-11915-J5501		COVER,DUST	ｶﾊﾞｰ	1	B
26	A-11927-Y7500		SHAFT,CENTER	ｼｬﾌﾄ	1	B
27	A-21035-65N00		BEARING	ﾍﾞｱﾘﾝｸﾞ	1	B
28	A-00922-24700		RING,SNAP	ﾘﾝｸﾞ	1	B
29	A-11926-NA000		BRACKET,PULLEY	ﾌﾞﾗｹｯﾄ	1	B
30	A-11915-J5502		COVER,DUST	ｶﾊﾞｰ	1	B
31	A-33023-90000		SPACER	ｽﾍﾟｰｻ	1	B
32	A-69763-10G01		SHAFT	ｼｬﾌﾄ	1	B

FIG. 5 FRONT COVER (B)
フロントカバー

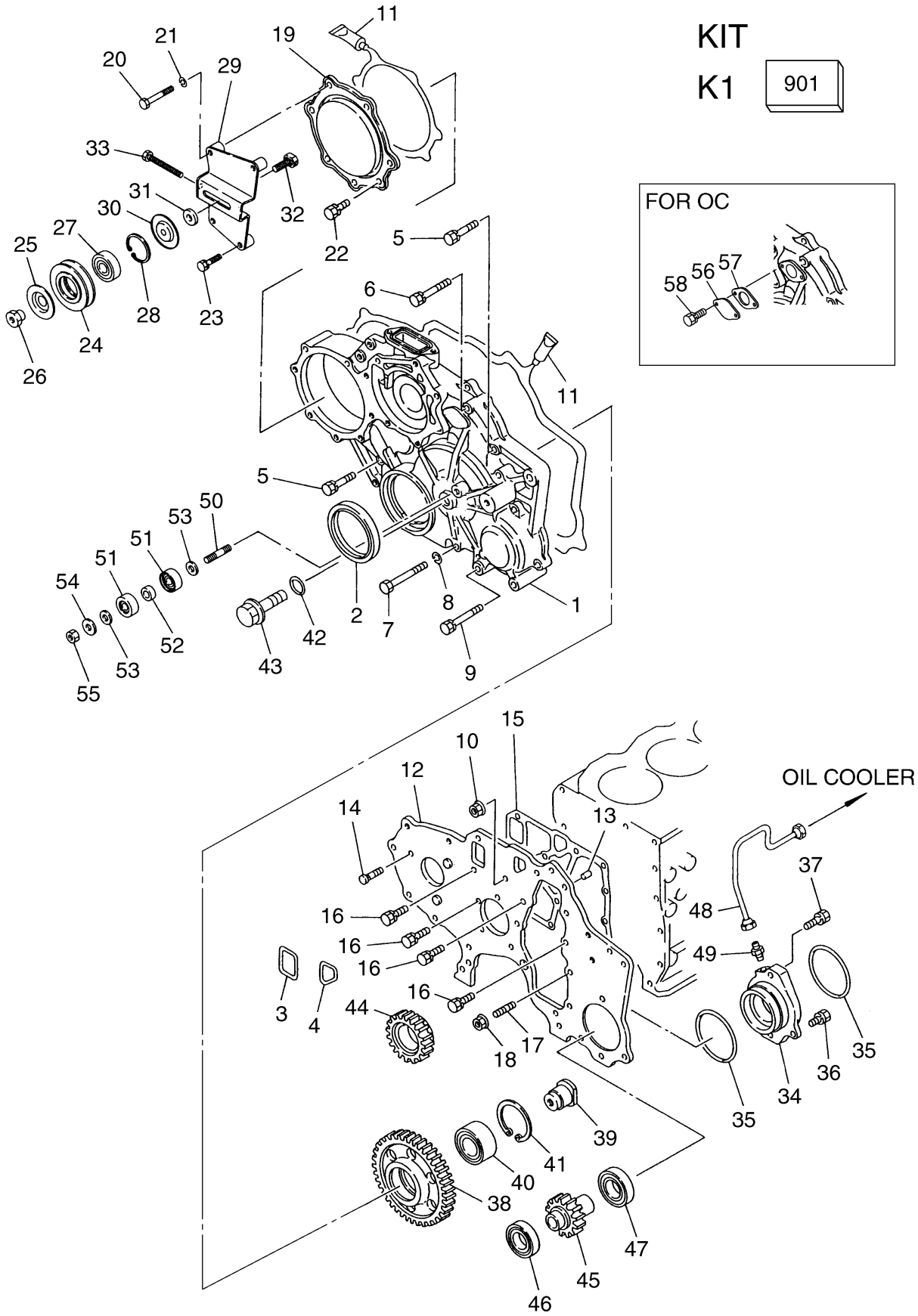

A		
	2t class	FD20C7, FD20T7, FD20W7, FD25C7, FD25T7, FD25W7,
	3t class	FD30C7, FD30T7, FD30W7,

B		
	1t class	FHD15C3, FHD15T3, FHD18C3, FHD18T3
	2t class	FD20C3, FD20C13, FD20T3, FD20T13, FD20W3, FD25C3, FD25C13, FD25T3, FD25T13, FD25W3
	3t class	FD30C3, FD30T3, FD30W3

FIG. 5

Item No. 見出番号	Part No. 部品番号	Mark 記号	Description 部品名称		Req'd 個数	Remarks : serial No. 備考：実施号車
33	A-01111-16144		BOLT,ADJUST	ﾎﾞﾙﾄ	1	B
34	A-69190-41K01		BRACKET,PUMP	ﾌﾞﾗｹｯﾄ	1	B
35	A-69170-L1400		O RING	Oﾘﾝｸﾞ	2	B
36	A-08120-8301E		BOLT&WASHER	ﾎﾞﾙﾄ&ﾜｯｼｬ	1	B
37	A-08121-0501E		BOLT&WASHER	ﾎﾞﾙﾄ&ﾜｯｼｬ	2	B
38	A-13014-41K00		GEAR,IDLER	ｷﾞﾔｰ	1	B
39	A-13016-41K00		SHAFT	ｼｬﾌﾄ	1	B
40	A-33379-40K00		BEARING	ﾍﾞｱﾘﾝｸﾞ	1	B
41	A-00922-26200		RING,SNAP	ﾘﾝｸﾞ	1	B
42	A-01001-20024		O RING	Oﾘﾝｸﾞ	1	B
43	A-01125-00104		BOLT&WASHER	ﾎﾞﾙﾄ&ﾜｯｼｬ	1	B
44	A-13021-40K00		GEAR,IDLER	ｷﾞﾔｰ	1	B
45	A-33320-40K00		GEAR,OUTPUT	ｷﾞﾔｰ	1	B
46	A-01011-00074		BEARING	ﾍﾞｱﾘﾝｸﾞ	1	B
47	A-33378-40K00		BEARING	ﾍﾞｱﾘﾝｸﾞ	1	B
48	A-15192-41K01		TUBE,OIL	ﾁｭｰﾌﾞ	1	B
49	A-01612-11134		CONNECTOR	ｺﾈｸﾀ	1	B
50	A-14065-41K00		STUD	ｽﾀｯﾄﾞ	1	B
51	A-11914-41K00		BUSHING	ﾌﾞｯｼﾝｸﾞ	2	B
52	A-01931-00394		SPACER	ｽﾍﾟｰｻ	1	B
53	A-08915-4401A		WASHER	ﾜｯｼｬ	2	B
54	A-21113-90003		WASHER	ﾜｯｼｬ	1	B
55	A-08911-2401A		NUT	ﾅｯﾄ	1	B
56	A-13040-09W00		COVER,PLATE	ｶﾊﾞｰ	1	B
						OC
57	A-13039-34N00		GASKET	ｶﾞｽｹｯﾄ	1	B
						OC
58	A-08120-61633		BOLT	ﾎﾞﾙﾄ	2	B
						OC

FIG. 6 OIL PAN (A)
オイルパン

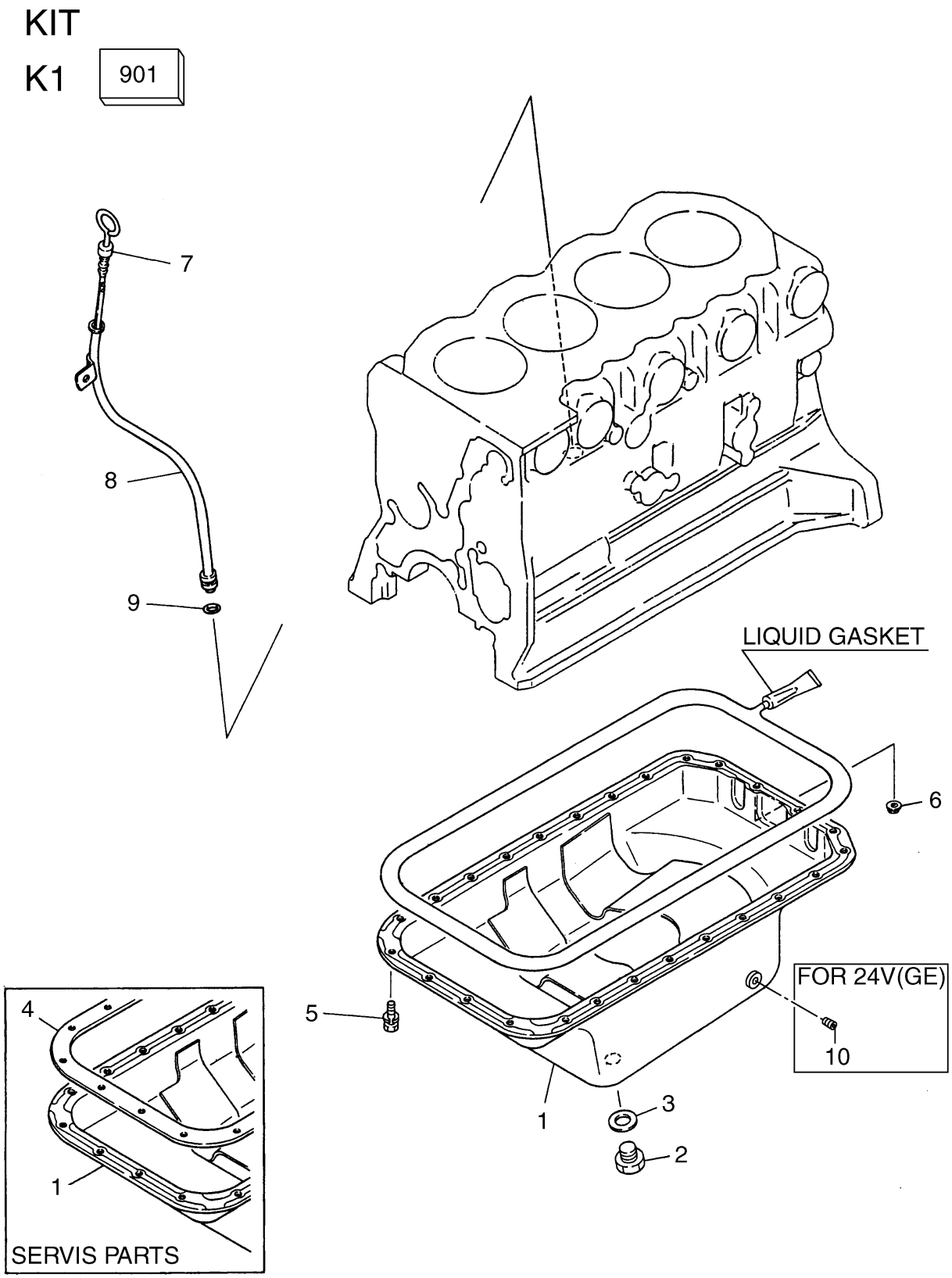

A		
	2t class	FD20C7, FD20T7, FD20W7, FD25C7, FD25T7, FD25W7,
	3t class	FD30C7, FD30T7, FD30W7,

B		
	1t class	FHD15C3, FHD15T3, FHD18C3, FHD18T3
	2t class	FD20C3, FD20C13, FD20T3, FD20T13, FD20W3, FD25C3, FD25C13, FD25T3, FD25T13, FD25W3
	3t class	FD30C3, FD30T3, FD30W3

FIG. 6

Item No. 見出番号	Part No. 部品番号	Mark 記号	Description 部品名称		Req'd 個数	Remarks : serial No. 備考：実施号車
901	A-10101-Z9826	K1	KIT,OVERHAUL	ｵｰﾊﾞﾎｰﾙｷｯﾄ	1	A
						INC.4 & etc.
1	A-11110-2T704		PAN,OIL	ﾊﾟﾝ	1	A
						INC.2,3
						STD,OC,HCS,UL-DS
-	A-11110-48K02		PAN,OIL	ﾊﾟﾝ	1	A
						INC.2,3
						24V(GE)
2	A-11128-69200		PLUG,DRAIN	ﾌﾟﾗｸﾞ	1	A
3	A-11026-61000		GASKET	ｶﾞｽｹｯﾄ	1	A
4	A-11121-63G03	*	GASKET	ｶﾞｽｹｯﾄ	1	A
						SERVICE PARTS
5	A-08120-61228		BOLT&WASHER	ﾎﾞﾙﾄ&ﾜｯｼｬ	24	A
6	A-08912-80610		NUT&WASHER	ﾅｯﾄ&ﾜｯｼｬ	2	A
7	A-11140-2T700		GAUGE,OIL LEVEL	ｹﾞｰｼﾞ	1	A
						STD,OC,HCS,UL-DS
-	A-11140-54T02		GAUGE,OIL LEVEL	ｹﾞｰｼﾞ	1	A
						24V(GE)
8	A-11150-54T00		GUIDE,GAUGE	ｶﾞｲﾄﾞ	1	A
9	A-15056-02N00		O RING	Oﾘﾝｸﾞ	1	A
10	A-08931-5121A		PLUG	ﾌﾟﾗｸﾞ	1	A
						24V(GE)

FIG. 7 OIL PAN (B)
オイルパン

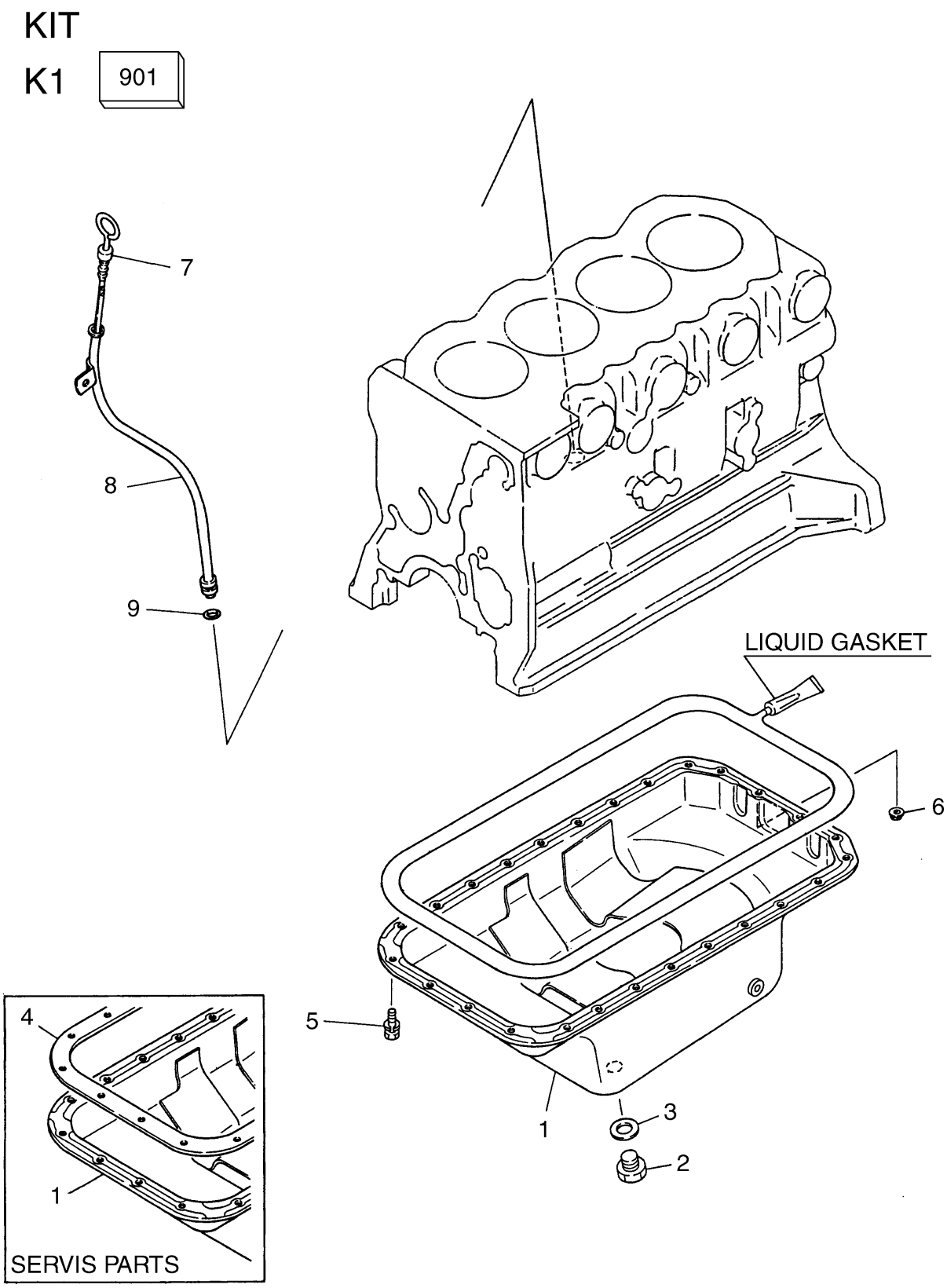

A	2t class	FD20C7, FD20T7, FD20W7, FD25C7, FD25T7, FD25W7,
	3t class	FD30C7, FD30T7, FD30W7,

B	1t class	FHD15C3, FHD15T3, FHD18C3, FHD18T3
	2t class	FD20C3, FD20C13, FD20T3, FD20T13, FD20W3, FD25C3, FD25C13, FD25T3, FD25T13, FD25W3
	3t class	FD30C3, FD30T3, FD30W3

FIG. 7

Item No. 見出番号	Part No. 部品番号	Mark 記号	Description 部品名称		Req'd 個数	Remarks : serial No. 備考：実施号車
901	A-10101-Z9826	K1	KIT,OVERHAUL	ｵｰﾊﾞﾎｰﾙｷｯﾄ	1	B
						INC.4 & etc.
1	A-11110-02N09		PAN,OIL	ﾊﾟﾝ	1	B
						INC.2,3
						STD
-	A-11110-2T704		PAN,OIL	ﾊﾟﾝ	1	B
						INC.2,3
						OC
2	A-11128-69200		PLUG,DRAIN	ﾌﾟﾗｸﾞ	1	B
3	A-11026-61000		GASKET	ｶﾞｽｹｯﾄ	1	B
4	A-11121-63G03	*	GASKET	ｶﾞｽｹｯﾄ	1	B
						SERVICE PARTS
5	A-08120-61228		BOLT&WASHER	ﾎﾞﾙﾄ&ﾜｯｼｬ	24	B
6	A-08912-80610		NUT&WASHER	ﾅｯﾄ&ﾜｯｼｬ	2	B
7	A-11140-02N01		GAUGE,OIL LEVEL	ｹﾞｰｼﾞ	1	B
						STD
-	A-11140-2T700		GAUGE,OIL LEVEL	ｹﾞｰｼﾞ	1	B
						OC
8	A-11150-54T00		GUIDE,GAUGE	ｶﾞｲﾄﾞ	1	B
9	A-15056-02N00		O RING	Oﾘﾝｸﾞ	1	B

FIG. 8 FLYWHEEL & CRANK PULLEY (A)
フライホイール&クランクプーリ

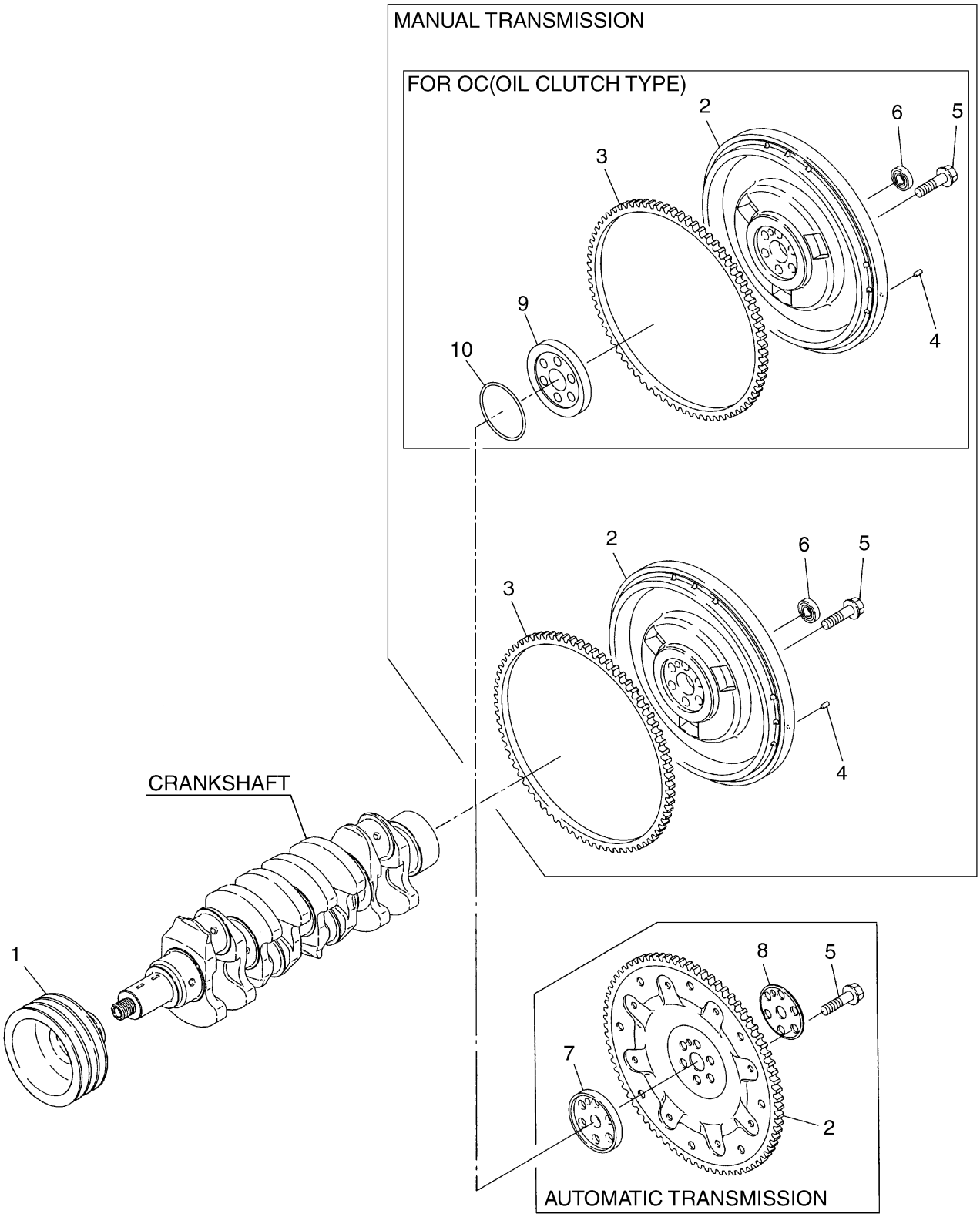

A	2t class	FD20C7, FD20T7, FD20W7, FD25C7, FD25T7, FD25W7,
	3t class	FD30C7, FD30T7, FD30W7,

B	1t class	FHD15C3, FHD15T3, FHD18C3, FHD18T3
	2t class	FD20C3, FD20C13, FD20T3, FD20T13, FD20W3, FD25C3, FD25C13, FD25T3, FD25T13, FD25W3
	3t class	FD30C3, FD30T3, FD30W3

FIG. 8

Item No. 見出番号	Part No. 部品番号	Mark 記号	Description 部品名称		Req'd 個数	Remarks : serial No. 備考：実施号車
1	A-12304-41K01		PULLEY,CRANK	ﾌﾟｰﾘ	1	A STD,24V(GE)
-	A-12304-6K200		PULLEY,CRANK	ﾌﾟｰﾘ	1	A OC,HCS,UL-DS
2	A-12310-NA000		FLYWHEEL	ﾌﾗｲﾎｲｰﾙ	1	A INC.3 STD,HCS,UL-DS,24V(GE) MANUAL T/M
-	A-12310-NA002		FLYWHEEL	ﾌﾗｲﾎｲｰﾙ	1	A INC.3 OC MANUAL T/M
-	A-12331-40K00		PLATE,DRIVE	ﾌﾟﾚｰﾄ	1	A AUTOMATIC T/M
3	A-12312-L1800		GEAR,RING	ｷﾞﾔｰ	1	A MANUAL T/M
4	A-12313-10600		PIN,DOWEL	ﾋﾟﾝ	2	A MANUAL T/M
5	A-12316-L2001		BOLT	ﾎﾞﾙﾄ	6	A MANUAL T/M
-	A-12315-2W200		BOLT	ﾎﾞﾙﾄ	6	A AUTOMATIC T/M
6	A-21170-69900		BEARING	ﾍﾞｱﾘﾝｸﾞ	1	A MANUAL T/M
7	A-12330-40K00		PILOT,CONVERTER	ﾊﾟｲﾛｯﾄ	1	A AUTOMATIC T/M
8	A-12333-02N01		PLATE,ADAPTER	ﾌﾟﾚｰﾄ	1	A AUTOMATIC T/M
9	A-12333-40K20		SPACER,CRANK	ｽﾍﾟｰｻ	1	A OC MANUAL T/M
10	A-30412-40K20		O RING	Oﾘﾝｸﾞ	1	A OC MANUAL T/M

FIG. 9 FLYWHEEL & CRANK PULLEY (B)
フライホイール&クランクプーリ

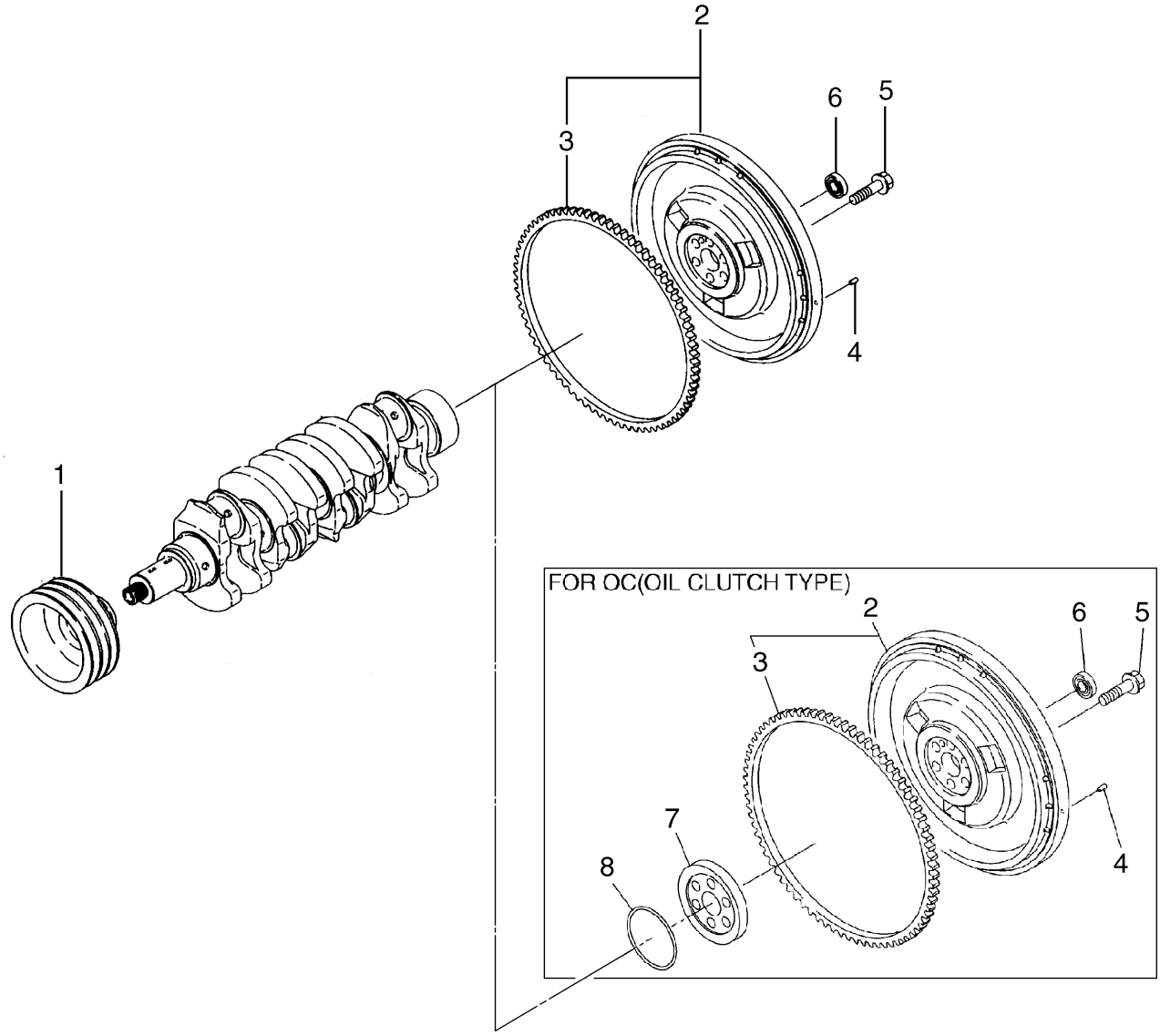

A	2t class	FD20C7, FD20T7, FD20W7, FD25C7, FD25T7, FD25W7,
	3t class	FD30C7, FD30T7, FD30W7,

B	1t class	FHD15C3, FHD15T3, FHD18C3, FHD18T3
	2t class	FD20C3, FD20C13, FD20T3, FD20T13, FD20W3, FD25C3, FD25C13, FD25T3, FD25T13, FD25W3
	3t class	FD30C3, FD30T3, FD30W3

FIG. 9

Item No. 見出番号	Part No. 部品番号	Mark 記号	Description 部品名称		Req'd 個数	Remarks : serial No. 備考：実施号車
1	A-12304-41K01		PULLEY,CRANK	ﾌﾟｰﾘ	1	B STD
-	A-12304-6K200		PULLEY,CRANK	ﾌﾟｰﾘ	1	B OC
2	A-12310-NA000		FLYWHEEL	ﾌﾗｲﾎｲｰﾙ	1	B INC.3 STD
-	A-12310-NA002		FLYWHEEL	ﾌﾗｲﾎｲｰﾙ	1	B INC.3 OC
3	A-12312-L1800		GEAR,RING	ｷﾞﾔｰ	1	B
4	A-12313-10600		PIN,DOWEL	ﾋﾟﾝ	2	B
5	A-12316-L2001		BOLT	ﾎﾞﾙﾄ	6	B
6	A-21170-69900		BEARING	ﾍﾞｱﾘﾝｸﾞ	1	B
7	A-12333-40K20		SPACER,CRANK	ｽﾍﾟｰｻ	1	B OC
8	A-30412-40K20		O RING	Oﾘﾝｸﾞ	1	B OC

FIG. 10 FLYWHEEL HOUSING (A)
フライホイールハウジング

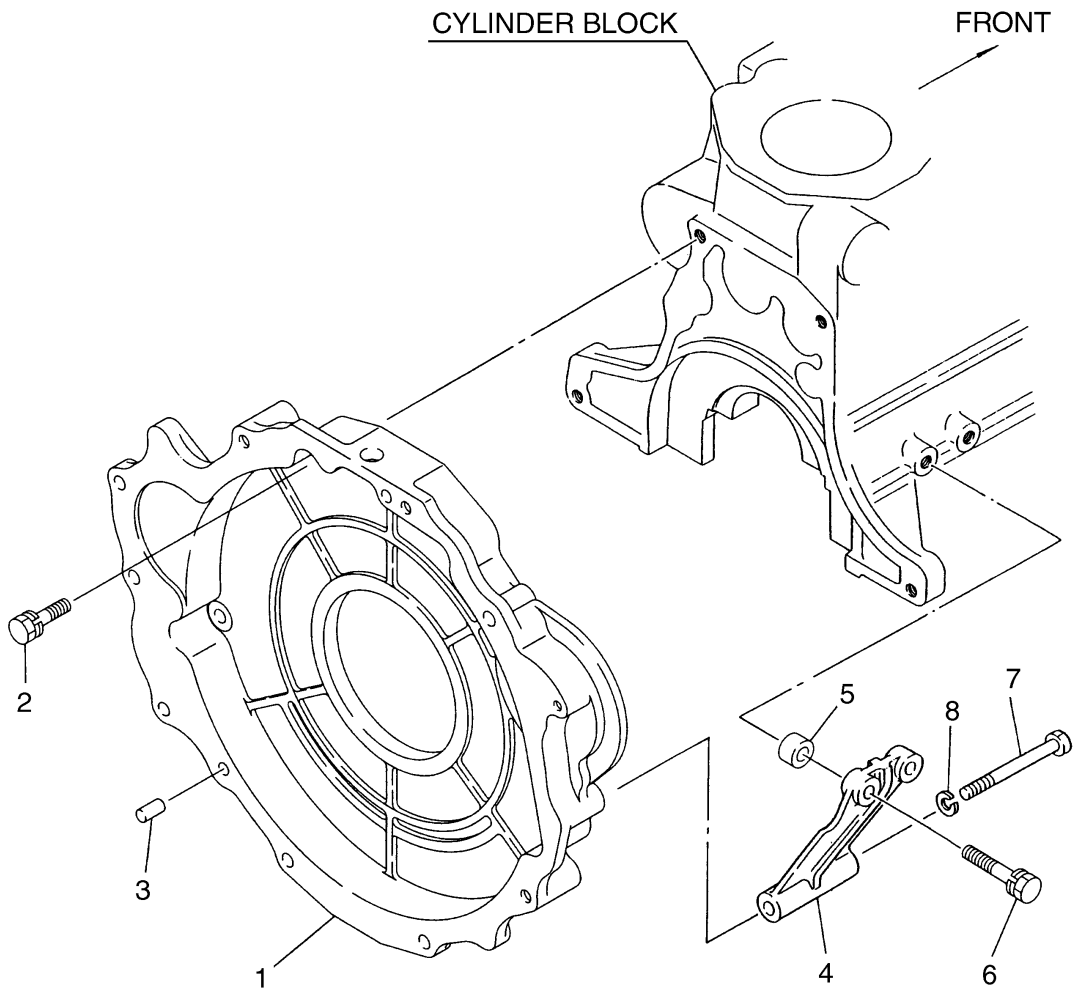

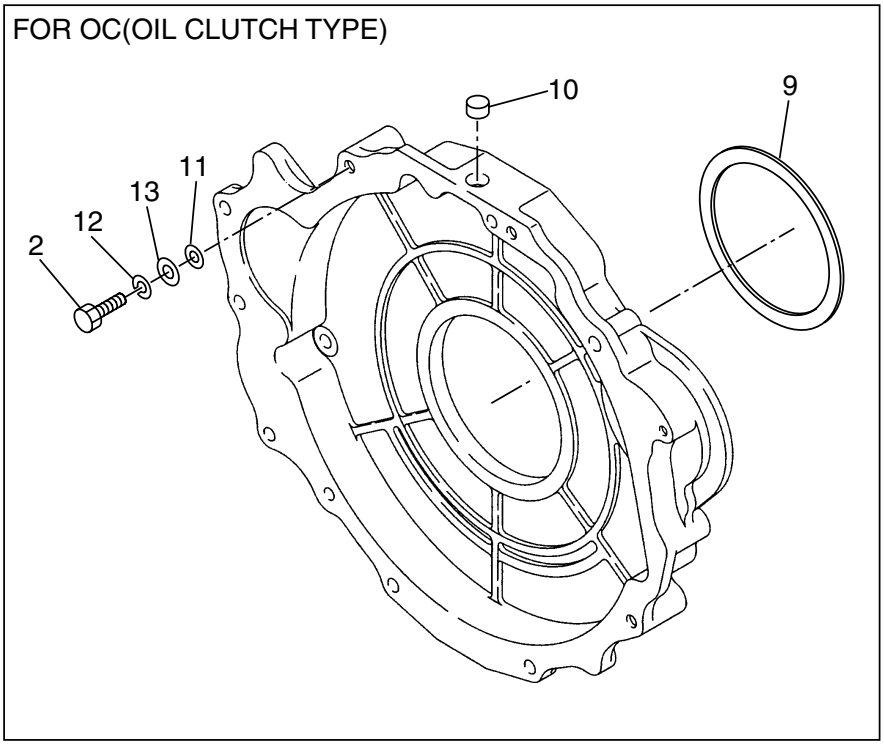

A	2t class	FD20C7, FD20T7, FD20W7, FD25C7, FD25T7, FD25W7,
	3t class	FD30C7, FD30T7, FD30W7,

B	1t class	FHD15C3, FHD15T3, FHD18C3, FHD18T3
	2t class	FD20C3, FD20C13, FD20T3, FD20T13, FD20W3, FD25C3, FD25C13, FD25T3, FD25T13, FD25W3
	3t class	FD30C3, FD30T3, FD30W3

FIG. 10

Item No. 見出番号	Part No. 部品番号	Mark 記号	Description 部品名称		Req'd 個数	Remarks : serial No. 備考：実施号車
1	A-12320-40K01		HOUSING,FLYWHEEL	ﾊｳｼﾞﾝｸﾞ	1	A STD,HCS,UL-DS,24V(GE)
-	A-12320-NA000		HOUSING,FLYWHEEL	ﾊｳｼﾞﾝｸﾞ	1	A OC
2	A-08121-0301E		BOLT&WASHER	ﾎﾞﾙﾄ&ﾜｯｼｬ	4	A STD,HCS,UL-DS,24V(GE)
-	A-30412-K7320		BOLT	ﾎﾞﾙﾄ	4	A OC
3	A-12313-L1122		PIN,DOWEL	ﾋﾟﾝ	2	A
4	A-30430-90013		GUSSET	ｶﾞｾｯﾄ	2	A
5	A-01931-00134		SPACER	ｽﾍﾟｰｻ	4	A
6	A-08121-0451E		BOLT&WASHER	ﾎﾞﾙﾄ&ﾜｯｼｬ	4	A
7	A-08121-0001A		BOLT	ﾎﾞﾙﾄ	2	A
8	A-08915-1401A		WASHER	ﾜｯｼｬ	2	A
9	A-12323-L1122		SEAL,OIL	ｼｰﾙ	1	A OC
10	A-12325-L1122		CAP,RUBBER	ｷｬｯﾌﾟ	1	A OC
11	A-12322-K7320		SEAL	ｼｰﾙ	4	A OC
12	A-08915-3401A		WASHER	ﾜｯｼｬ	4	A OC
13	A-08915-4401A		WASHER	ﾜｯｼｬ	4	A OC

FIG. 11 FLYWHEEL HOUSING (B)
フライホイールハウジング

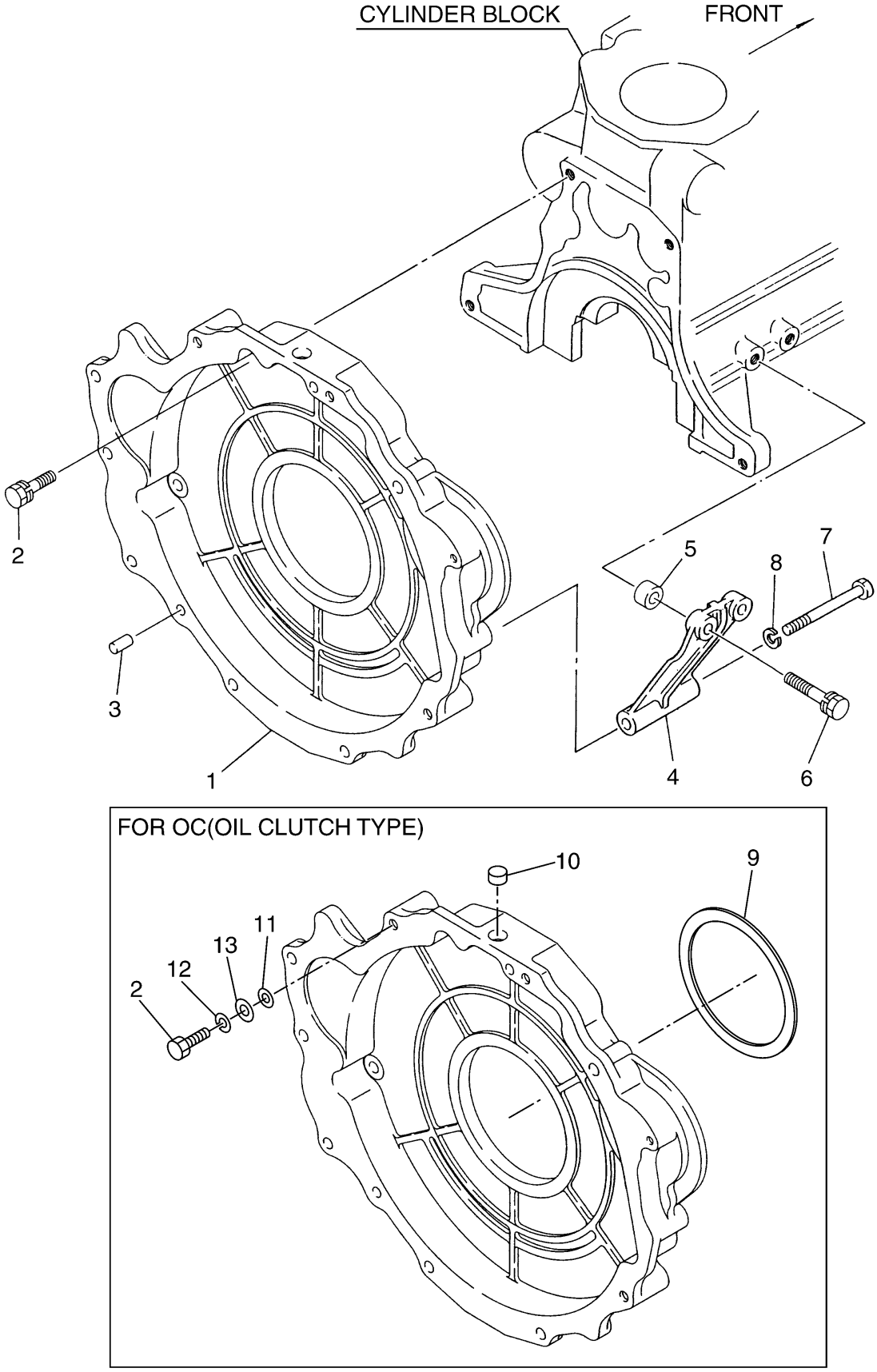

A	2t class	FD20C7, FD20T7, FD20W7, FD25C7, FD25T7, FD25W7,
	3t class	FD30C7, FD30T7, FD30W7,

B	1t class	FHD15C3, FHD15T3, FHD18C3, FHD18T3
	2t class	FD20C3, FD20C13, FD20T3, FD20T13, FD20W3, FD25C3, FD25C13, FD25T3, FD25T13, FD25W3
	3t class	FD30C3, FD30T3, FD30W3

FIG. 11

Item No. 見出番号	Part No. 部品番号	Mark 記号	Description 部品名称		Req'd 個数	Remarks : serial No. 備考：実施号車
1	A-12320-40K01		HOUSING,FLYWHEEL	ﾊｳｼﾞﾝｸﾞ	1	B
						STD
-	A-12320-NA000		HOUSING,FLYWHEEL	ﾊｳｼﾞﾝｸﾞ	1	B
						OC
2	A-08121-0301E		BOLT&WASHER	ﾎﾞﾙﾄ&ﾜｯｼｬ	4	B
						STD
-	A-30412-K7320		BOLT	ﾎﾞﾙﾄ	4	B
						OC
3	A-12313-L1122		PIN,DOWEL	ﾋﾟﾝ	2	B
4	A-30430-90013		GUSSET	ｶﾞｾｯﾄ	2	B
5	A-01931-00134		SPACER	ｽﾍﾟｰｻ	4	B
6	A-08121-0451E		BOLT&WASHER	ﾎﾞﾙﾄ&ﾜｯｼｬ	4	B
7	A-08121-0001A		BOLT	ﾎﾞﾙﾄ	2	B
8	A-08915-1401A		WASHER	ﾜｯｼｬ	2	B
9	A-12323-L1122		SEAL,OIL	ｼｰﾙ	1	B
						OC
10	A-12325-L1122		CAP,RUBBER	ｷｬｯﾌﾟ	1	B
						OC
11	A-12322-K7320		SEAL	ｼｰﾙ	4	B
						OC
12	A-08915-3401A		WASHER	ﾜｯｼｬ	4	B
						OC
13	A-08915-4401A		WASHER	ﾜｯｼｬ	4	B
						OC

FIG. 12 CYLINDER HEAD (A)
シリンダ ヘッド

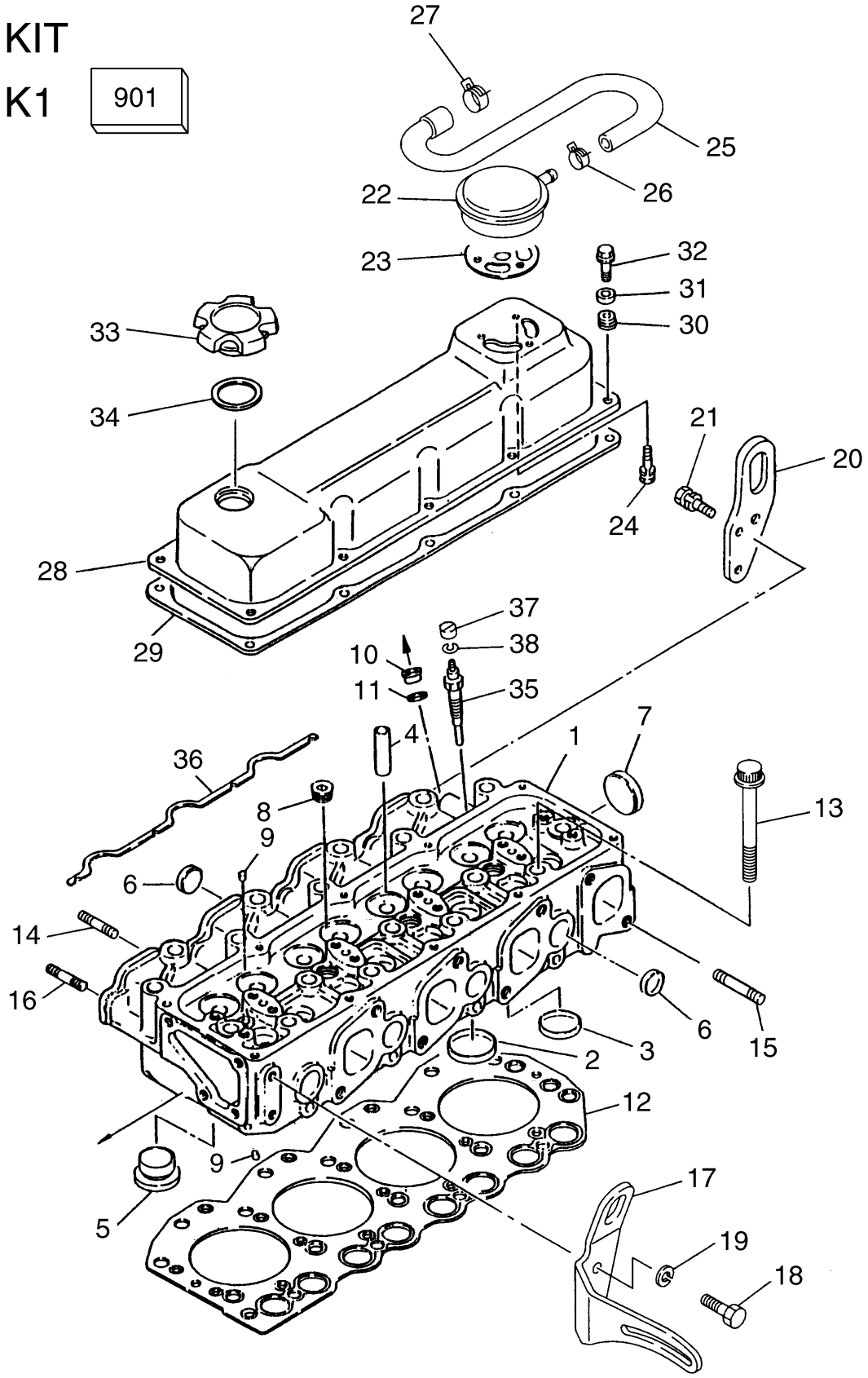

A	2t class	FD20C7, FD20T7, FD20W7, FD25C7, FD25T7, FD25W7,
	3t class	FD30C7, FD30T7, FD30W7,

B	1t class	FHD15C3, FHD15T3, FHD18C3, FHD18T3
	2t class	FD20C3, FD20C13, FD20T3, FD20T13, FD20W3, FD25C3, FD25C13, FD25T3, FD25T13, FD25W3
	3t class	FD30C3, FD30T3, FD30W3

FIG. 12

Item No. 見出番号	Part No. 部品番号	Mark 記号	Description 部品名称		Req'd 個数	Remarks : serial No. 備考：実施号車
901	A-10101-Z9826	K1	KIT,OVERHAUL	ｵｰﾊﾞﾎｰﾙｷｯﾄ	1	A
						INC.12,29,31 & etc.
1	A-11039-40K02		HEAD,CYLINDER	ﾍｯﾄﾞ	1	A
						INC.2-11
2	A-11098-45N00		SEAT,VALVE,INLET	ｼｰﾄ	4	A
3	A-11099-45N00		SEAT,VALVE,EXHAUST	ｼｰﾄ	4	A
						STD
-	A-11099-45N10		SEAT,VALVE,EXHAUST	ｼｰﾄ	4	A
						O.S.=0.2mm
-	A-11099-45N11		SEAT,VALVE,EXHAUST	ｼｰﾄ	4	A
						O.S.=0.4mm
4	A-13212-54T01		GUIDE,VALVE	ｶﾞｲﾄﾞ	8	A
5	A-11076-40K01		CHAMBER	ﾁｬﾝﾊﾞ	4	A
6	A-01648-00024		PLUG,WELCH	ﾌﾟﾗｸﾞ	7	A
7	A-01648-00044		PLUG,WELCH	ﾌﾟﾗｸﾞ	2	A
8	A-00931-20800		PLUG,TAPER	ﾌﾟﾗｸﾞ	3	A
9	A-00933-20650		PLUG,TAPER	ﾌﾟﾗｸﾞ	2	A
10	A-16650-43G01		SUPPORT,NOZZLE	ｻﾎﾟｰﾄ	4	A
11	A-16625-43G02		WASHER	ﾜｯｼｬ	4	A
12	A-11044-43G01	*	GASKET	ｶﾞｽｹｯﾄ	1	A
						GRADE=1
-	A-11044-43G02	*	GASKET	ｶﾞｽｹｯﾄ	1	A
						GRADE=2
-	A-11044-43G03	*	GASKET	ｶﾞｽｹｯﾄ	1	A
						GRADE=3
13	A-11056-09D61		BOLT	ﾎﾞﾙﾄ	18	A
14	A-08223-82210		STUD	ｽﾀｯﾄﾞ	1	A
15	A-08227-03040		STUD	ｽﾀｯﾄﾞ	8	A
16	A-08223-82810		STUD	ｽﾀｯﾄﾞ	1	A
17	A-11715-40K00		ADJUST,GENERATOR	ｱｼﾞｬｽﾄ	1	A
18	A-08171-0201A		BOLT	ﾎﾞﾙﾄ	2	A
19	A-08915-1401A		WASHER	ﾜｯｼｬ	2	A
20	A-10006-43G00		SLINGER,REAR	ｽﾘﾝｶﾞ	1	A
21	A-081B0-8201A		BOLT&WASHER	ﾎﾞﾙﾄ&ﾜｯｼｬ	2	A
22	A-11810-43G00		BREATHER	ﾌﾞﾘｰｻﾞ	1	A
23	A-11033-43G03		GASKET	ｶﾞｽｹｯﾄ	1	A
24	A-08120-62028		BOLT&WASHER	ﾎﾞﾙﾄ&ﾜｯｼｬ	3	A
25	A-11826-40K00		HOSE,BLOWBY	ﾎｰｽ	1	A
26	A-22316-T8203		CLIP	ｸﾘｯﾌﾟ	1	A
27	A-01558-00124		CLIP	ｸﾘｯﾌﾟ	1	A
28	A-13265-02N02		COVER,ROCKER	ｶﾊﾞｰ	1	A
29	A-13270-43G03	*	GASKET	ｶﾞｽｹｯﾄ	1	A
30	A-13268-D0104		TRAY	ﾄﾚｰ	10	A
31	A-13268-29N00	*	WASHER,SEAL	ﾜｯｼｬ	10	A
32	A-13224-0W800		SCREW&WASHER	ｽｸﾘｭ&ﾜｯｼｬ	10	A
33	A-15255-D5502		CAP,FILLER	ｷｬｯﾌﾟ	1	A
						INC.34
34	A-15270-D0103		GASKET	ｶﾞｽｹｯﾄ	1	A
35	A-11065-63G00		PLUG,GLOW	ﾌﾟﾗｸﾞ	4	A
						STD,OC,HCS,UL-DS

FIG. 12 CYLINDER HEAD (A)
シリンダ ヘッド

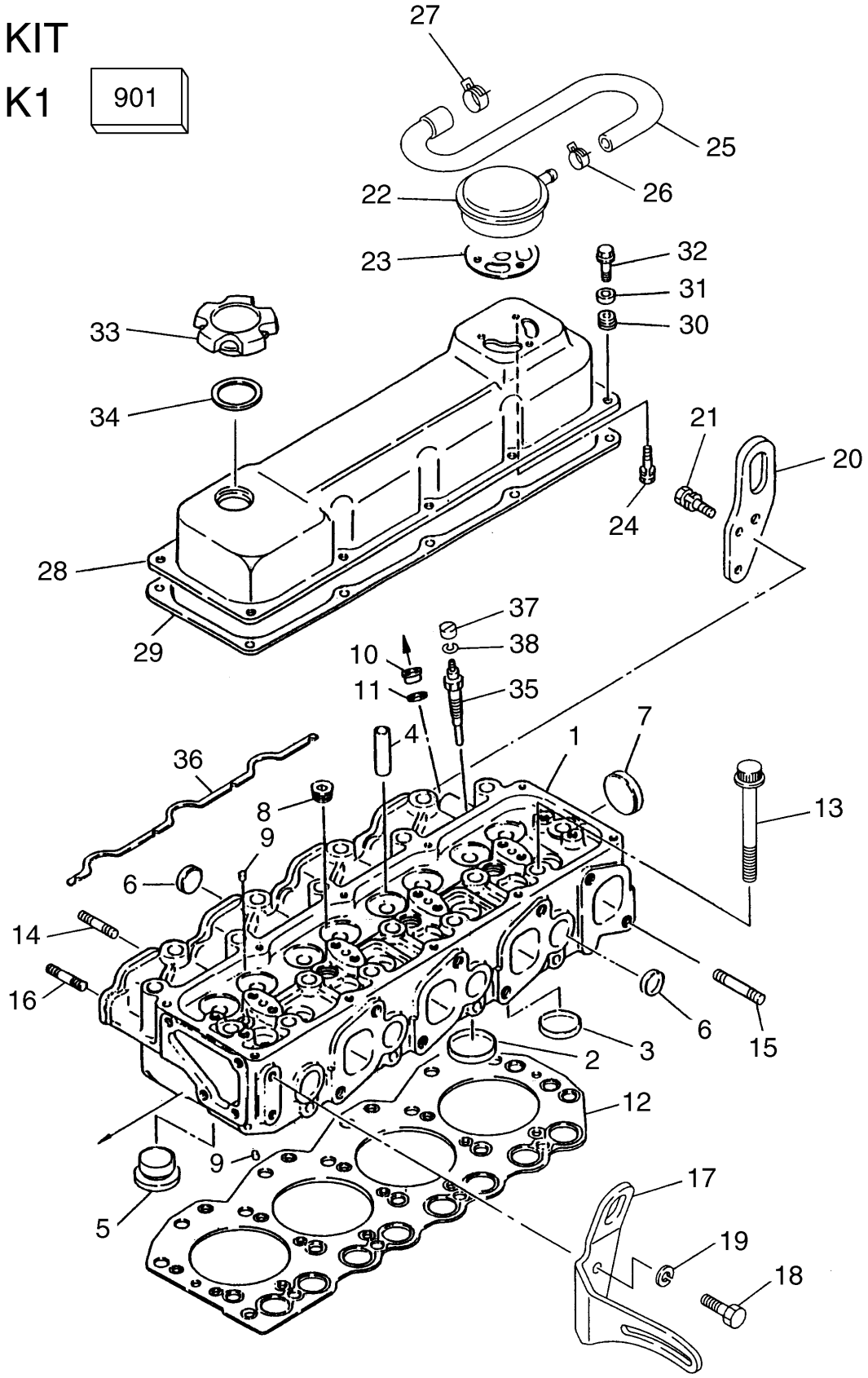

A	2t class	FD20C7, FD20T7, FD20W7, FD25C7, FD25T7, FD25W7,
	3t class	FD30C7, FD30T7, FD30W7,

B	1t class	FHD15C3, FHD15T3, FHD18C3, FHD18T3
	2t class	FD20C3, FD20C13, FD20T3, FD20T13, FD20W3, FD25C3, FD25C13, FD25T3, FD25T13, FD25W3
	3t class	FD30C3, FD30T3, FD30W3

FIG. 12

Item No. 見出番号	Part No. 部品番号	Mark 記号	Description 部品名称		Req'd 個数	Remarks : serial No. 備考：実施号車
35	A-11065-10T01		PLUG,GLOW	ﾌﾟﾗｸﾞ	4	A
						24V(GE)
36	A-11086-43G00		PLATE,GLOW	ﾌﾟﾚｰﾄ	1	A
37	A-11066-0W800		NUT	ﾅｯﾄ	4	A
38	A-08915-13410		WASHER	ﾜｯｼｬ	4	A

FIG. 13 CYLINDER HEAD (B)
シリンダ ヘッド

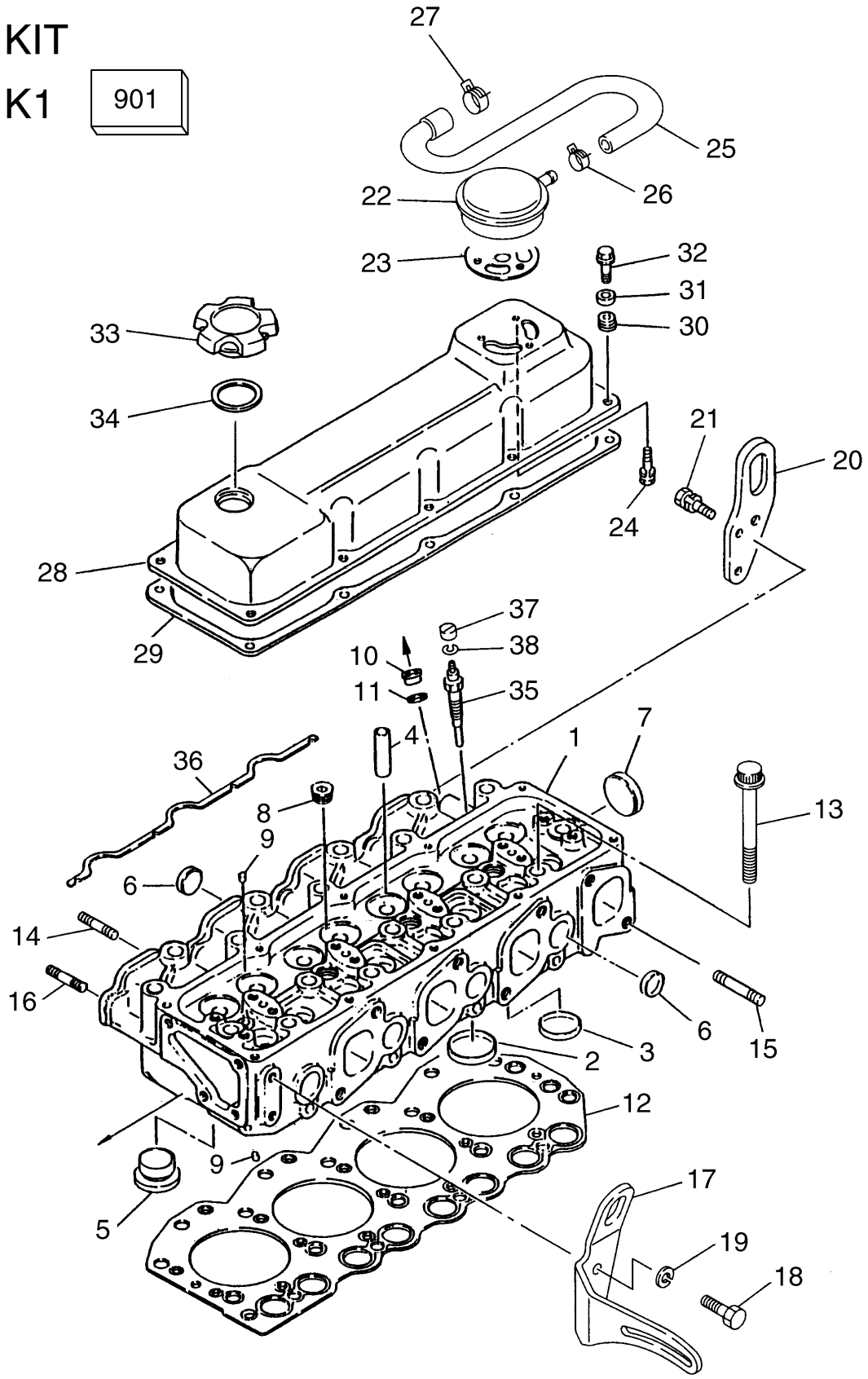

A		
	2t class	FD20C7, FD20T7, FD20W7, FD25C7, FD25T7, FD25W7,
	3t class	FD30C7, FD30T7, FD30W7,

B		
	1t class	FHD15C3, FHD15T3, FHD18C3, FHD18T3
	2t class	FD20C3, FD20C13, FD20T3, FD20T13, FD20W3, FD25C3, FD25C13, FD25T3, FD25T13, FD25W3
	3t class	FD30C3, FD30T3, FD30W3

FIG. 13

Item No. 見出番号	Part No. 部品番号	Mark 記号	Description 部品名称		Req'd 個数	Remarks : serial No. 備考：実施号車
901	A-10101-Z9826	K1	KIT,OVERHAUL	ｵｰﾊﾞﾎｰﾙｷｯﾄ	1	B
						INC.12,29,31 & etc.
1	A-11039-40K02		HEAD,CYLINDER	ﾍｯﾄﾞ	1	B
						INC.2-11
2	A-11098-45N00		SEAT,VALVE,INLET	ｼｰﾄ	4	B
3	A-11099-45N00		SEAT,VALVE,EXHAUST	ｼｰﾄ	4	B
						STD
-	A-11099-45N10		SEAT,VALVE,EXHAUST	ｼｰﾄ	4	B
						O.S.=0.2mm
-	A-11099-45N11		SEAT,VALVE,EXHAUST	ｼｰﾄ	4	B
						O.S.=0.4mm
4	A-13212-54T01		GUIDE,VALVE	ｶﾞｲﾄﾞ	8	B
5	A-11076-40K01		CHAMBER	ﾁｬﾝﾊﾞ	4	B
6	A-01648-00024		PLUG,WELCH	ﾌﾟﾗｸﾞ	7	B
7	A-01648-00044		PLUG,WELCH	ﾌﾟﾗｸﾞ	2	B
8	A-00931-20800		PLUG,TAPER	ﾌﾟﾗｸﾞ	3	B
9	A-00933-20650		PLUG,TAPER	ﾌﾟﾗｸﾞ	2	B
10	A-16650-43G01		SUPPORT,NOZZLE	ｻﾎﾟｰﾄ	4	B
11	A-16625-43G02		WASHER	ﾜｯｼｬ	4	B
12	A-11044-43G01	*	GASKET	ｶﾞｽｹｯﾄ	1	B
						GRADE=1
-	A-11044-43G02	*	GASKET	ｶﾞｽｹｯﾄ	1	B
						GRADE=2
-	A-11044-43G03	*	GASKET	ｶﾞｽｹｯﾄ	1	B
						GRADE=3
13	A-11056-09D61		BOLT	ﾎﾞﾙﾄ	18	B
14	A-08223-82210		STUD	ｽﾀｯﾄﾞ	1	B
15	A-08227-03040		STUD	ｽﾀｯﾄﾞ	8	B
16	A-08223-82810		STUD	ｽﾀｯﾄﾞ	1	B
17	A-11715-40K00		ADJUST,GENERATOR	ｱｼﾞｬｽﾄ	1	B
18	A-08171-0201A		BOLT	ﾎﾞﾙﾄ	2	B
19	A-08915-1401A		WASHER	ﾜｯｼｬ	2	B
20	A-10006-43G00		SLINGER,REAR	ｽﾘﾝｶﾞ	1	B
21	A-081B0-8201A		BOLT&WASHER	ﾎﾞﾙﾄ&ﾜｯｼｬ	2	B
22	A-11810-43G00		BREATHER	ﾌﾞﾘｰｻﾞ	1	B
23	A-11033-43G03		GASKET	ｶﾞｽｹｯﾄ	1	B
24	A-08120-62028		BOLT&WASHER	ﾎﾞﾙﾄ&ﾜｯｼｬ	3	B
25	A-11826-40K00		HOSE,BLOWBY	ﾎｰｽ	1	B
26	A-22316-T8203		CLIP	ｸﾘｯﾌﾟ	1	B
27	A-01558-00124		CLIP	ｸﾘｯﾌﾟ	1	B
28	A-13265-02N02		COVER,ROCKER	ｶﾊﾞｰ	1	B
29	A-13270-43G03	*	GASKET	ｶﾞｽｹｯﾄ	1	B
30	A-13268-D0104		TRAY	ﾄﾚｰ	10	B
31	A-13268-29N00	*	WASHER,SEAL	ﾜｯｼｬ	10	B
32	A-13224-0W800		SCREW&WASHER	ｽｸﾘｭ&ﾜｯｼｬ	10	B
33	A-15255-D5502		CAP,FILLER	ｷｬｯﾌﾟ	1	B
						INC.34
34	A-15270-D0103		GASKET	ｶﾞｽｹｯﾄ	1	B
35	A-11065-63G00		PLUG,GLOW	ﾌﾟﾗｸﾞ	4	B
36	A-11086-43G00		PLATE,GLOW	ﾌﾟﾚｰﾄ	1	B

FIG. 13 CYLINDER HEAD (B)
シリンダ ヘッド

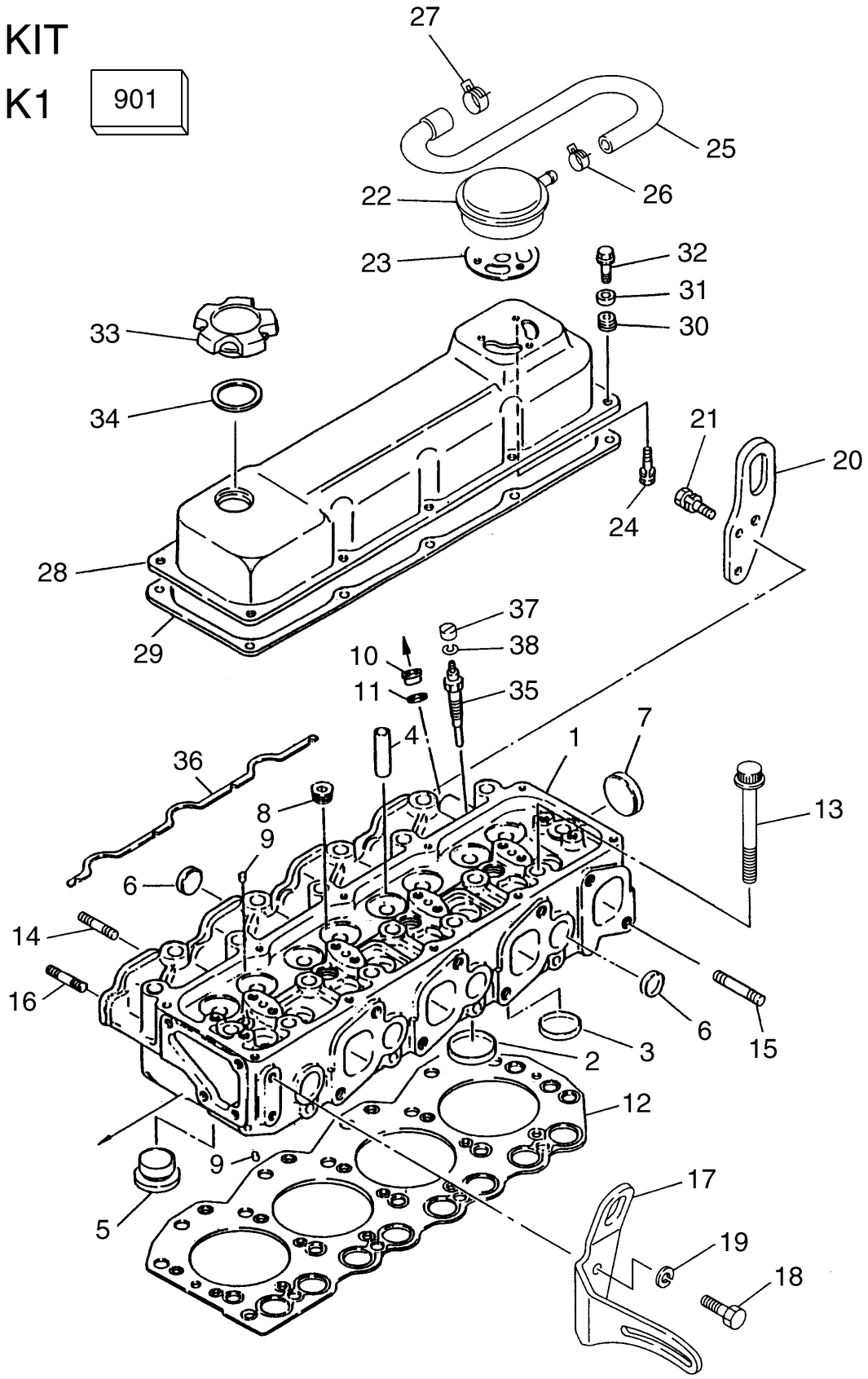

A	2t class	FD20C7, FD20T7, FD20W7, FD25C7, FD25T7, FD25W7,
	3t class	FD30C7, FD30T7, FD30W7,

B	1t class	FHD15C3, FHD15T3, FHD18C3, FHD18T3
	2t class	FD20C3, FD20C13, FD20T3, FD20T13, FD20W3, FD25C3, FD25C13, FD25T3, FD25T13, FD25W3
	3t class	FD30C3, FD30T3, FD30W3

FIG. 13

Item No. 見出番号	Part No. 部品番号	Mark 記号	Description 部品名称	Req'd 個数	Remarks : serial No. 備考：実施号車
37	A-11066-0W800		NUT ﾅｯﾄ	4	B
38	A-08915-13410		WASHER ﾜｯｼｬ	4	B

FIG. 14 VALVE MECHANISM
ﾊﾞﾙﾌﾞﾒｶﾆｽﾞﾑ

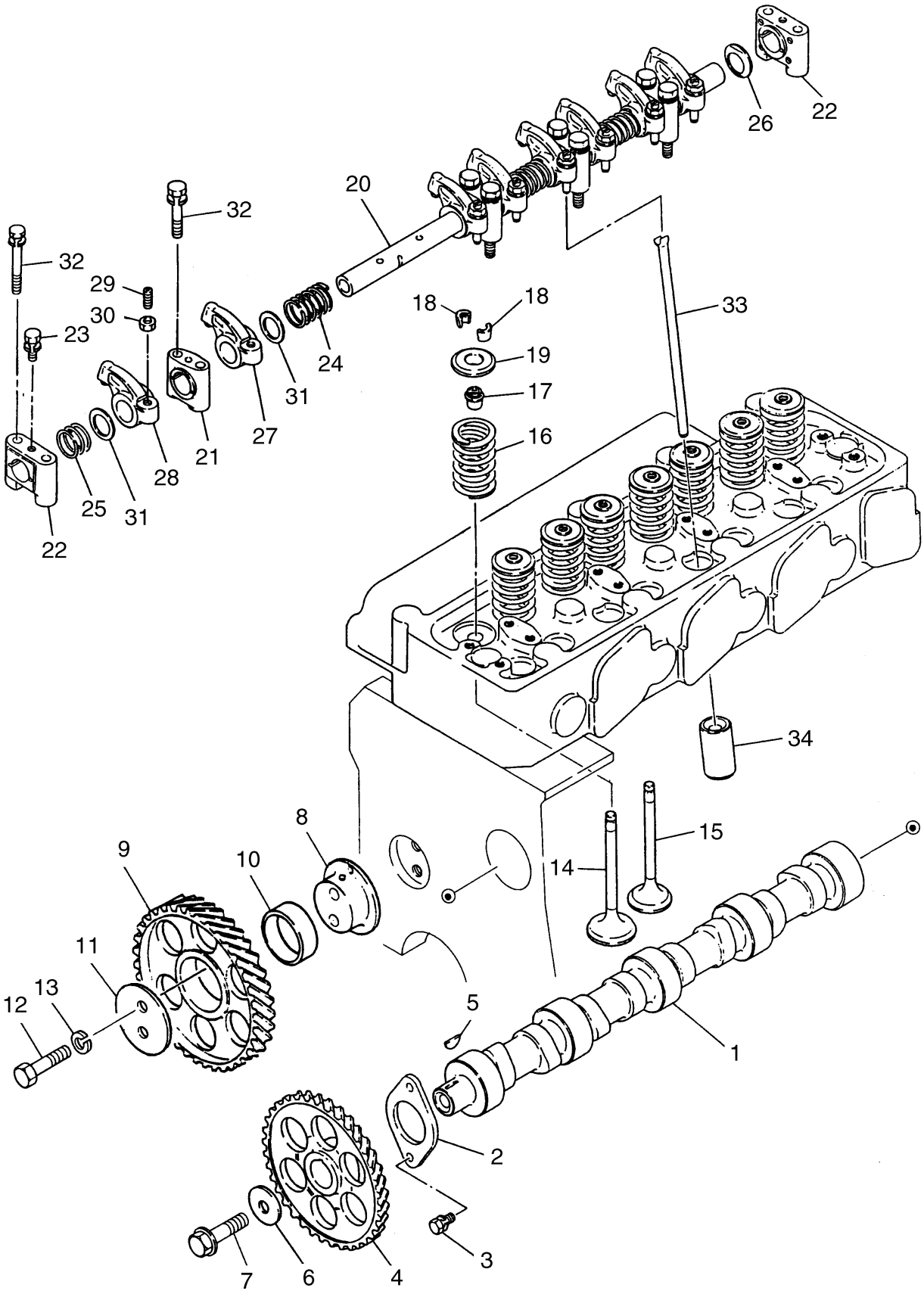

A	2t class	FD20C7, FD20T7, FD20W7, FD25C7, FD25T7, FD25W7,
	3t class	FD30C7, FD30T7, FD30W7,

B	1t class	FHD15C3, FHD15T3, FHD18C3, FHD18T3
	2t class	FD20C3, FD20C13, FD20T3, FD20T13, FD20W3, FD25C3, FD25C13, FD25T3, FD25T13, FD25W3
	3t class	FD30C3, FD30T3, FD30W3

FIG. 14

Item No. 見出番号	Part No. 部品番号	Mark 記号	Description 部品名称		Req'd 個数	Remarks : serial No. 備考：実施号車
1	A-13001-54T03		CAMSHAFT	ｶﾑｼｬﾌﾄ	1	
2	A-13010-06J00		PLATE,LOCATING	ﾌﾟﾚｰﾄ	1	
3	A-08120-61628		BOLT&WASHER	ﾎﾞﾙﾄ&ﾜｯｼｬ	2	
4	A-13024-0T600		GEAR	ｷﾞﾔｰ	1	
5	A-00926-41600		KEY,WOODRUFF	ｷｰ	1	
6	A-13030-37500		WASHER	ﾜｯｼｬ	1	
7	A-08051-0501A		BOLT&WASHER	ﾎﾞﾙﾄ&ﾜｯｼｬ	1	
8	A-13016-54T00		SHAFT	ｼｬﾌﾄ	1	
9	A-13012-54T00		GEAR,IDLER	ｷﾞﾔｰ	1	INC.10
10	A-13015-43G01		BUSHING	ﾌﾞｯｼﾝｸﾞ	1	
11	A-13011-43G00		PLATE	ﾌﾟﾚｰﾄ	1	
12	A-08170-8501A		BOLT	ﾎﾞﾙﾄ	2	
13	A-08915-1381A		WASHER	ﾜｯｼｬ	2	
14	A-13201-43G01		VALVE,INLET	ﾊﾞﾙﾌﾞ	4	
15	A-13202-43G01		VALVE,EXHAUST	ﾊﾞﾙﾌﾞ	4	
16	A-13203-90010		SPRING,VALVE	ｽﾌﾟﾘﾝｸﾞ	8	
17	A-13207-V1700		SEAL,VALVE STEM	ｼｰﾙ	8	
18	A-13208-Z5500		COLLAR,SPLIT	ｶﾗｰ	16	
19	A-13209-43G01		RETAINER	ﾘﾃｰﾅ	8	
20	A-13252-43G02		SHAFT,ROCKER	ｼｬﾌﾄ	1	
21	A-13222-43G00		BRACKET,ROCKER	ﾌﾞﾗｹｯﾄ	4	
22	A-13223-43G01		BRACKET,ROCKER	ﾌﾞﾗｹｯﾄ	2	
23	A-081A0-6161A		BOLT&WASHER	ﾎﾞﾙﾄ&ﾜｯｼｬ	2	
24	A-13256-43G01		SPRING	ｽﾌﾟﾘﾝｸﾞ	3	
25	A-13256-43G02		SPRING	ｽﾌﾟﾘﾝｸﾞ	1	
26	A-13255-43G00		SPRING	ｽﾌﾟﾘﾝｸﾞ	1	
27	A-13257-63G01		ROCKER	ﾛｯｶ	4	
28	A-13258-63G01		ROCKER	ﾛｯｶ	4	
29	A-13234-43G01		SCREW,ADJUST	ｽｸﾘｭ	8	
30	A-01225-00112		NUT	ﾅｯﾄ	8	
31	A-13297-43G00		WASHER	ﾜｯｼｬ	8	
32	A-08120-8601F		BOLT&WASHER	ﾎﾞﾙﾄ&ﾜｯｼｬ	12	
33	A-13238-43G00		PUSH ROD	ﾌﾟｯｼｭﾛｯﾄﾞ	8	
34	A-13231-54T02		LIFTER,VALVE	ﾘﾌﾀ	8	

FIG. 15 AIR INTAKE MANIFOLD
エアーインテークマニホールド

KIT

K1 901

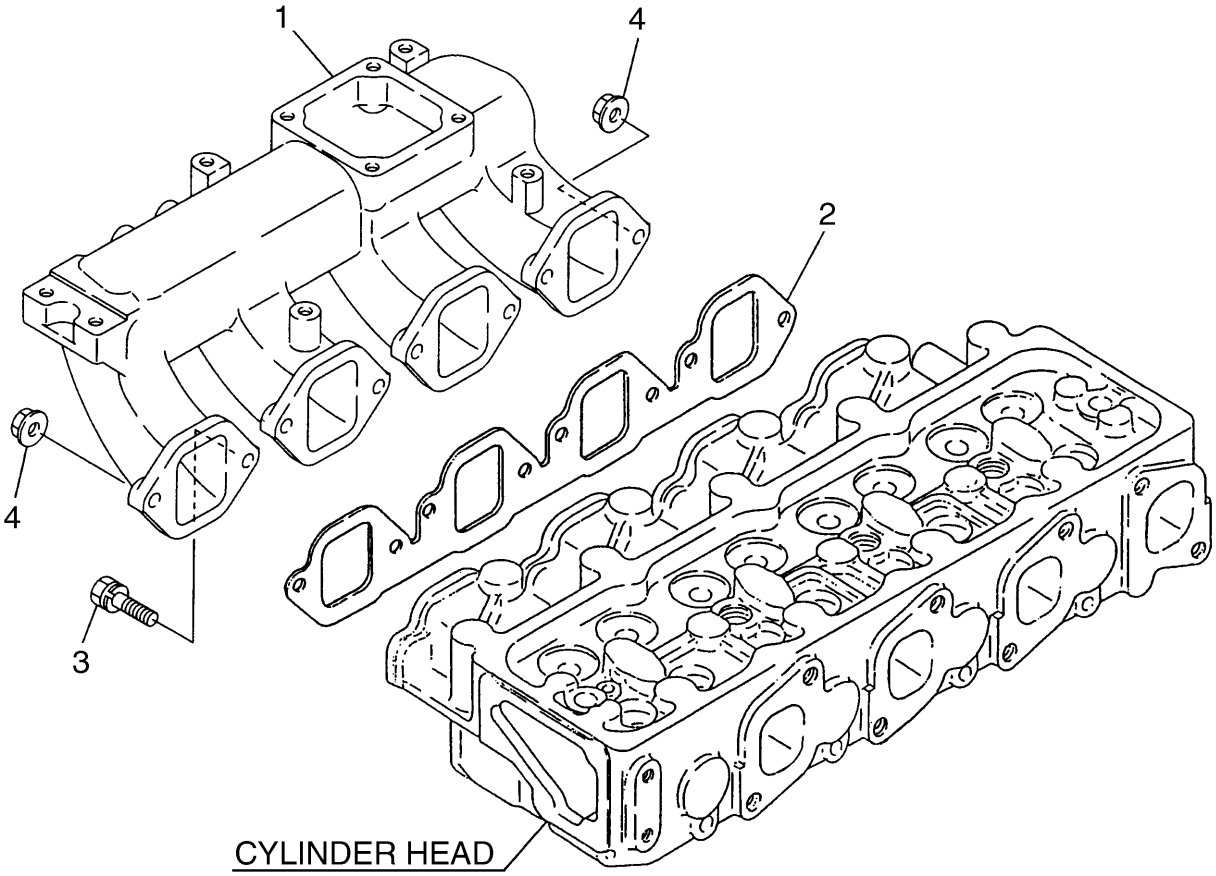

A	2t class	FD20C7, FD20T7, FD20W7, FD25C7, FD25T7, FD25W7,
	3t class	FD30C7, FD30T7, FD30W7,

B	1t class	FHD15C3, FHD15T3, FHD18C3, FHD18T3
	2t class	FD20C3, FD20C13, FD20T3, FD20T13, FD20W3, FD25C3, FD25C13, FD25T3, FD25T13, FD25W3
	3t class	FD30C3, FD30T3, FD30W3

FIG. 15

Item No. 見出番号	Part No. 部品番号	Mark 記号	Description 部品名称		Req'd 個数	Remarks : serial No. 備考：実施号車
901	A-10101-Z9826	K1	KIT,OVERHAUL	ｵｰﾊﾞﾎｰﾙｷｯﾄ	1	INC.2 & etc.
1	A-14003-41K01		MANIFOLD,AIR INTAKE	ﾏﾆﾎｰﾙﾄﾞ	1	
2	A-14035-31N00	*	GASKET	ｶﾞｽｹｯﾄ	1	
3	A-08120-8251E		BOLT&WASHER	ﾎﾞﾙﾄ&ﾜｯｼｬ	6	
4	A-08911-1081G		NUT&WASHER	ﾅｯﾄ&ﾜｯｼｬ	2	

FIG. 16 EXHAUST MANIFOLD (A)
エキゾ ーストマニホールド

KIT

K1 901

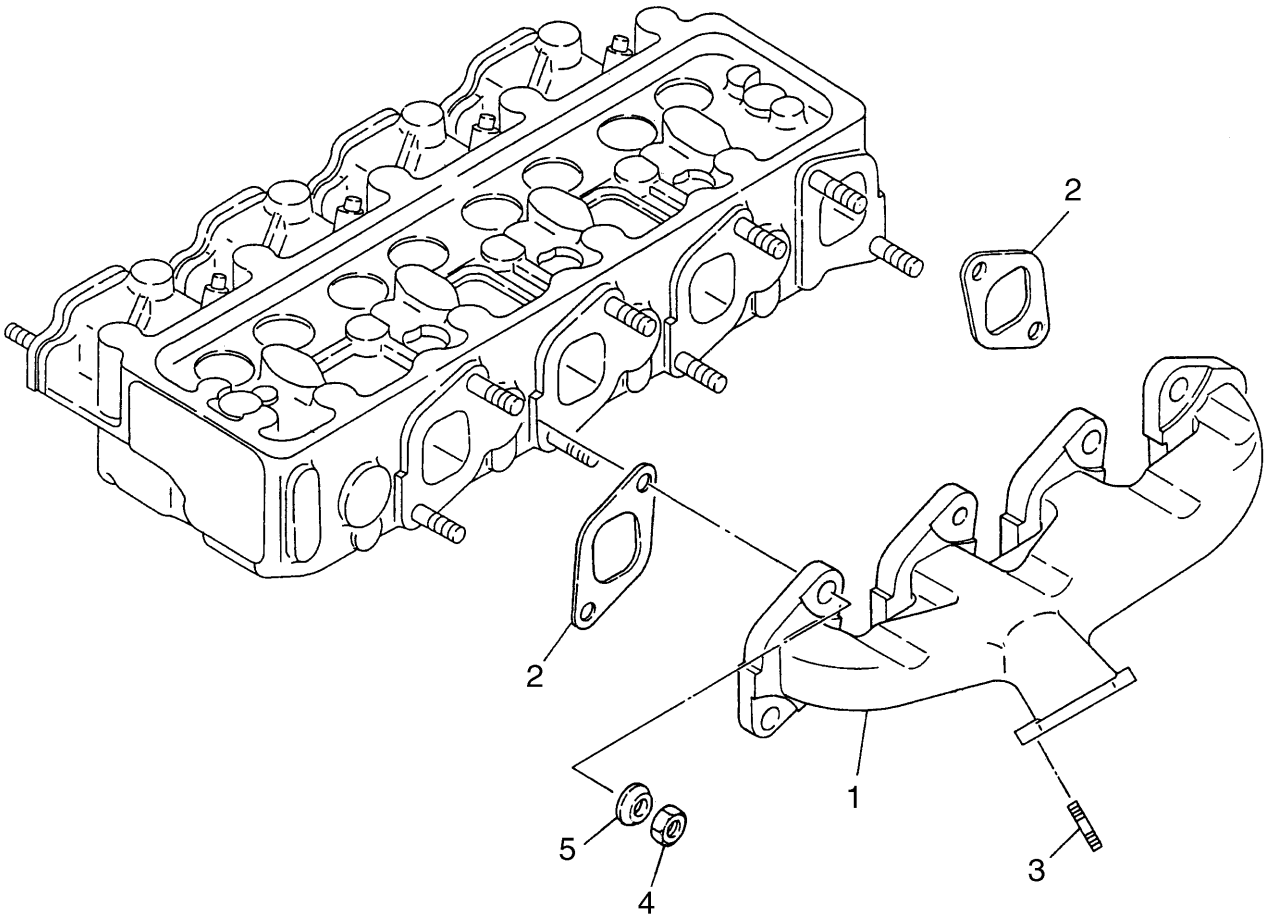

A	2t class	FD20C7, FD20T7, FD20W7, FD25C7, FD25T7, FD25W7,
	3t class	FD30C7, FD30T7, FD30W7,

B	1t class	FHD15C3, FHD15T3, FHD18C3, FHD18T3
	2t class	FD20C3, FD20C13, FD20T3, FD20T13, FD20W3, FD25C3, FD25C13, FD25T3, FD25T13, FD25W3
	3t class	FD30C3, FD30T3, FD30W3

FIG. 16

Item No. 見出番号	Part No. 部品番号	Mark 記号	Description 部品名称		Req'd 個数	Remarks : serial No. 備考：実施号車
901	A-10101-Z9826	K1	KIT,OVERHAUL	ｵｰﾊﾞﾎｰﾙｷｯﾄ	1	A
						INC.2 & etc.
1	A-14004-41K00		MANIFOLD,EXHAUST	ﾏﾆﾎｰﾙﾄﾞ	1	A
2	A-14036-43G00	*	GASKET	ｶﾞｽｹｯﾄ	4	A
3	A-01151-01004		STUD	ｽﾀｯﾄﾞ	2	A
4	A-08911-6401A		NUT	ﾅｯﾄ	8	A
5	A-14038-96000		WASHER	ﾜｯｼｬ	8	A

FIG. 17 EXHAUST MANIFOLD (B)
エキゾーストマニホールド

KIT

K1 901

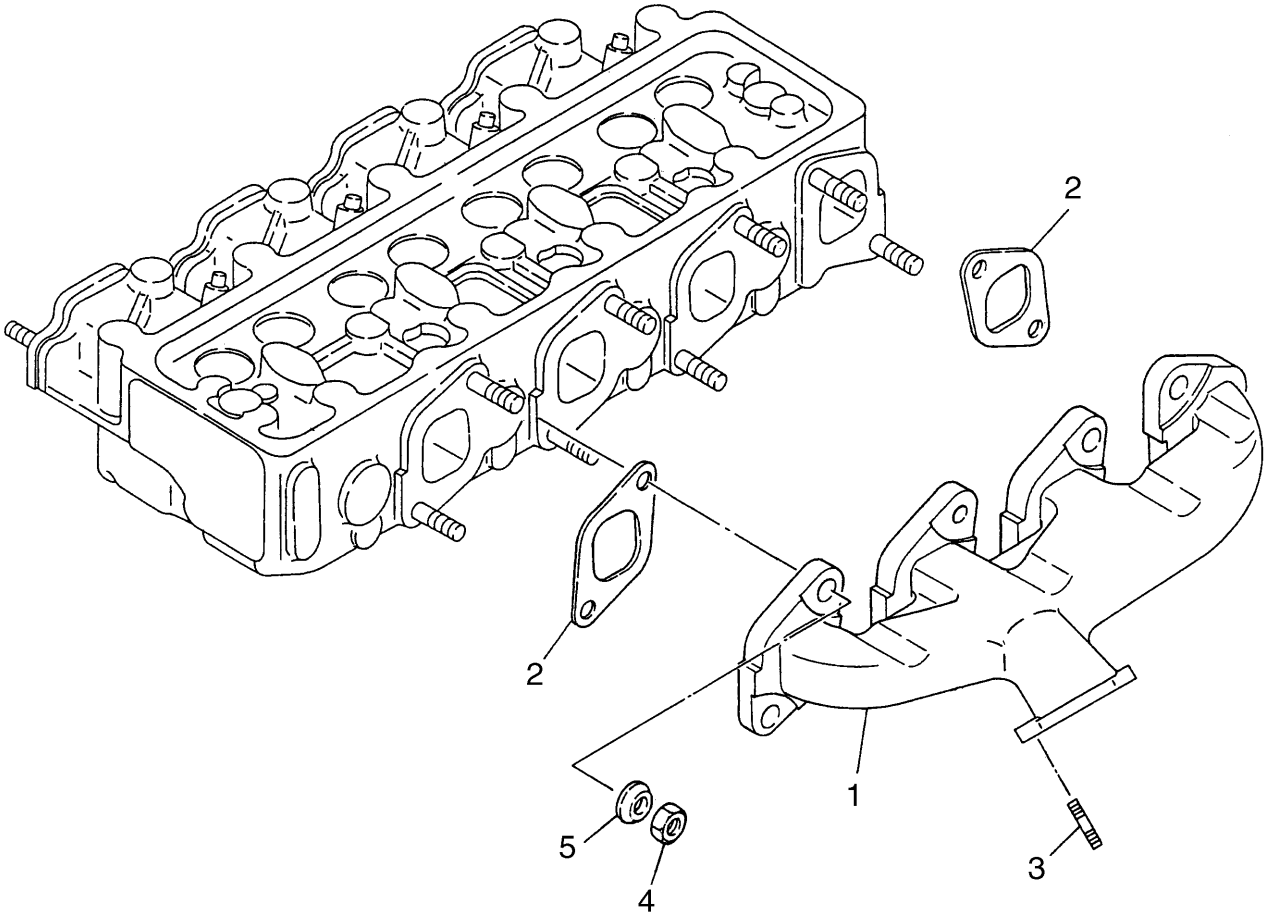

A	2t class	FD20C7, FD20T7, FD20W7, FD25C7, FD25T7, FD25W7,
	3t class	FD30C7, FD30T7, FD30W7,

B	1t class	FHD15C3, FHD15T3, FHD18C3, FHD18T3
	2t class	FD20C3, FD20C13, FD20T3, FD20T13, FD20W3, FD25C3, FD25C13, FD25T3, FD25T13, FD25W3
	3t class	FD30C3, FD30T3, FD30W3

FIG. 17

Item No. 見出番号	Part No. 部品番号	Mark 記号	Description 部品名称		Req'd 個数	Remarks : serial No. 備考：実施号車
901	A-10101-Z9826	K1	KIT,OVERHAUL	ｵｰﾊﾞﾎｰﾙｷｯﾄ	1	B
						INC.2 & etc.
1	A-14004-NA000		MANIFOLD,EXHAUST	ﾏﾆﾎｰﾙﾄﾞ	1	B
2	A-14036-43G00	*	GASKET	ｶﾞｽｹｯﾄ	4	B
3	A-08227-02510		STUD	ｽﾀｯﾄﾞ	2	B
4	A-08911-6401A		NUT	ﾅｯﾄ	8	B
5	A-14038-96000		WASHER	ﾜｯｼｬ	8	B

FIG. 18 OIL PUMP & OIL FILTER (A)
オイルポンプ&オイルフィルタ

KIT

K1 901

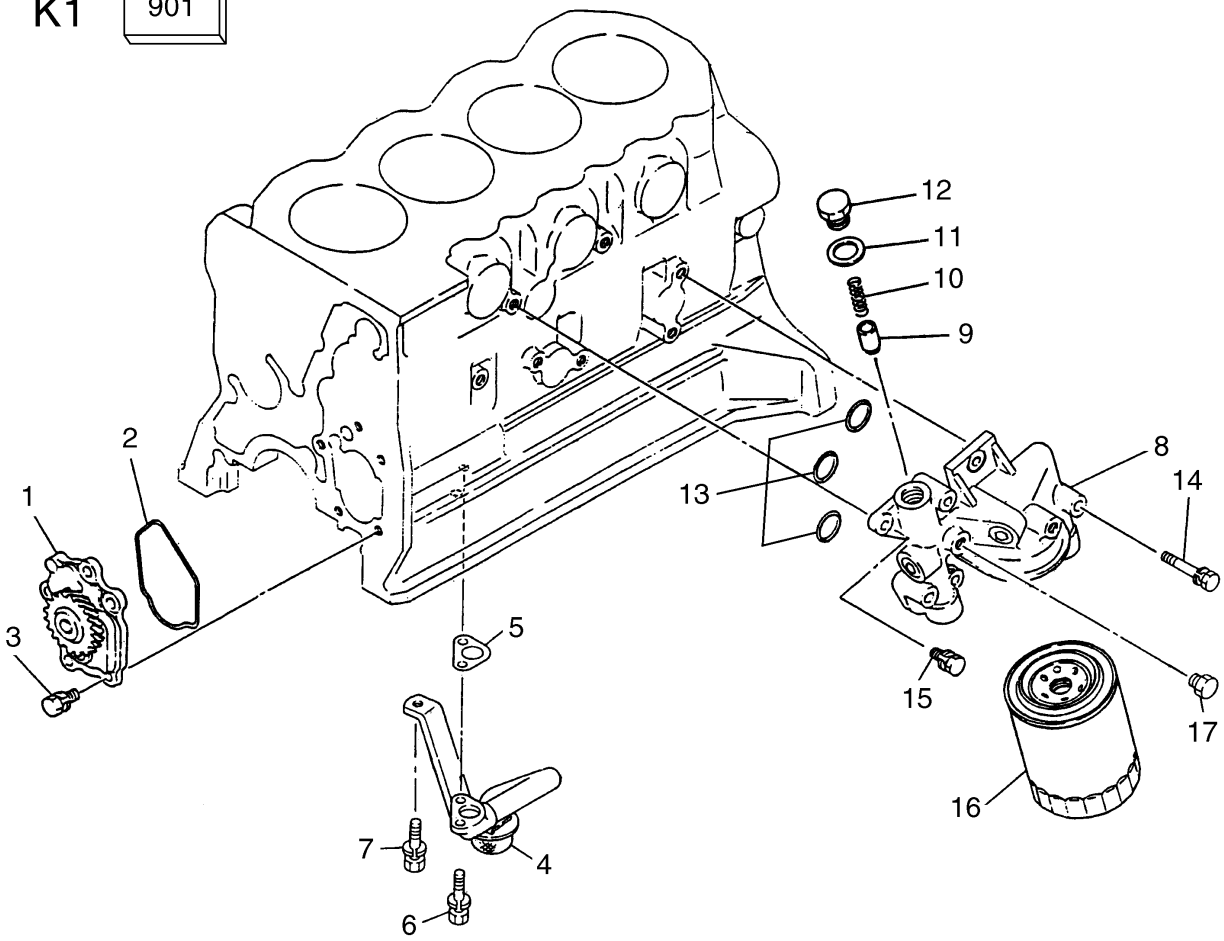

A	2t class	FD20C7, FD20T7, FD20W7, FD25C7, FD25T7, FD25W7,
	3t class	FD30C7, FD30T7, FD30W7,

B	1t class	FHD15C3, FHD15T3, FHD18C3, FHD18T3
	2t class	FD20C3, FD20C13, FD20T3, FD20T13, FD20W3, FD25C3, FD25C13, FD25T3, FD25T13, FD25W3
	3t class	FD30C3, FD30T3, FD30W3

FIG. 18

Item No. 見出番号	Part No. 部品番号	Mark 記号	Description 部品名称		Req'd 個数	Remarks : serial No. 備考：実施号車
901	A-10101-Z9826	K1	KIT,OVERHAUL	ｵｰﾊﾞﾎｰﾙｷｯﾄ	1	A
						INC.2,5,13 & etc.
1	A-15010-43G06		PUMP,OIL	ﾎﾟﾝﾌﾟ	1	A
2	A-15025-43G01	*	GASKET	ｶﾞｽｹｯﾄ	1	A
3	A-08120-8201E		BOLT&WASHER	ﾎﾞﾙﾄ&ﾜｯｼｬ	5	A
4	A-15050-2T701		STRAINER,OIL	ｽﾄﾚｰﾅ	1	A
						STD,OC,HCS,UL-DS
-	A-15050-54T04		STRAINER,OIL	ｽﾄﾚｰﾅ	1	A
						24V(GE)
5	A-15053-80G00	*	GASKET	ｶﾞｽｹｯﾄ	1	A
6	A-08120-8201E		BOLT&WASHER	ﾎﾞﾙﾄ&ﾜｯｼｬ	2	A
7	A-08120-8161E		BOLT&WASHER	ﾎﾞﾙﾄ&ﾜｯｼｬ	1	A
8	A-15238-2S600		BRACKET,FILTER	ﾌﾞﾗｹｯﾄ	1	A
						INC.9-12
9	A-15132-43G01		VALVE	ﾊﾞﾙﾌﾞ	1	A
10	A-15133-06J01		SPRING,VALVE	ｽﾌﾟﾘﾝｸﾞ	1	A
11	A-05412-1800P		WASHER,SEAL	ﾜｯｼｬ	1	A
12	A-15134-43G01		CAP,VALVE	ｷｬｯﾌﾟ	1	A
13	A-21334-02N00	*	O RING	Oﾘﾝｸﾞ	3	A
14	A-08120-8451E		BOLT&WASHER	ﾎﾞﾙﾄ&ﾜｯｼｬ	3	A
15	A-08120-8201E		BOLT&WASHER	ﾎﾞﾙﾄ&ﾜｯｼｬ	4	A
16	A-15208-43G00		CARTRIDGE,OIL	ｶｰﾄﾘｯｼﾞ	1	A
17	A-08931-5021A		PLUG,TAPER	ﾌﾟﾗｸﾞ	1	A

FIG. 19 OIL PUMP & OIL FILTER (B)
オイルポンプ&オイルフィルタ

KIT

K1 901

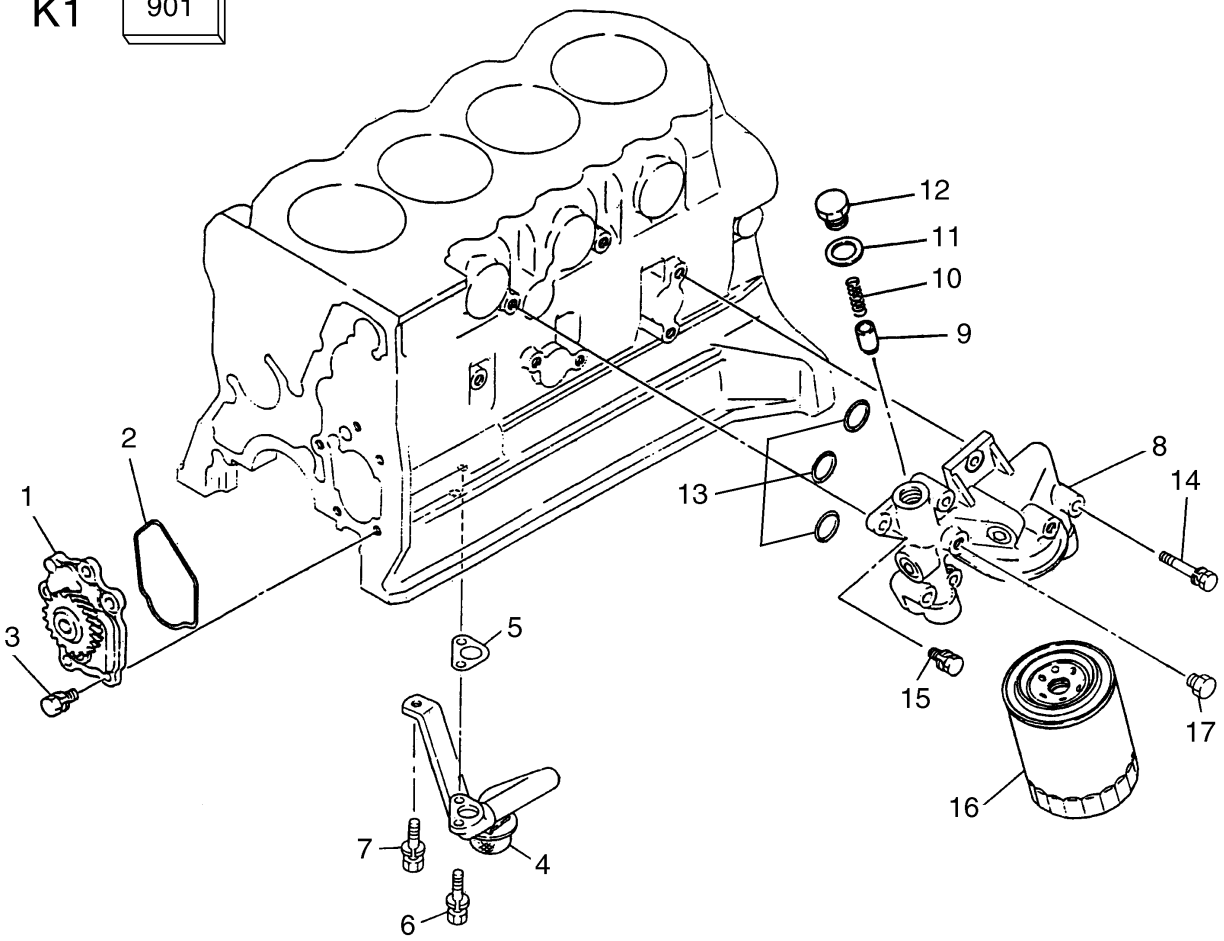

A	2t class	FD20C7, FD20T7, FD20W7, FD25C7, FD25T7, FD25W7,
	3t class	FD30C7, FD30T7, FD30W7,

B	1t class	FHD15C3, FHD15T3, FHD18C3, FHD18T3
	2t class	FD20C3, FD20C13, FD20T3, FD20T13, FD20W3, FD25C3, FD25C13, FD25T3, FD25T13, FD25W3
	3t class	FD30C3, FD30T3, FD30W3

FIG. 19

Item No. 見出番号	Part No. 部品番号	Mark 記号	Description 部品名称		Req'd 個数	Remarks : serial No. 備考：実施号車
901	A-10101-Z9826	K1	KIT,OVERHAUL	ｵｰﾊﾞﾎｰﾙｷｯﾄ	1	B
						INC.2,5,13 & etc.
1	A-15010-43G06		PUMP,OIL	ﾎﾟﾝﾌﾟ	1	B
2	A-15025-43G01	*	GASKET	ｶﾞｽｹｯﾄ	1	B
3	A-08120-8201E		BOLT&WASHER	ﾎﾞﾙﾄ&ﾜｯｼｬ	5	B
4	A-15050-02N01		STRAINER,OIL	ｽﾄﾚｰﾅ	1	B
						STD
-	A-15050-2T701		STRAINER,OIL	ｽﾄﾚｰﾅ	1	B
						OC
5	A-15053-80G00	*	GASKET	ｶﾞｽｹｯﾄ	1	B
6	A-08120-8201E		BOLT&WASHER	ﾎﾞﾙﾄ&ﾜｯｼｬ	2	B
7	A-08120-8161E		BOLT&WASHER	ﾎﾞﾙﾄ&ﾜｯｼｬ	1	B
8	A-15238-2S600		BRACKET,FILTER	ﾌﾞﾗｹｯﾄ	1	B
						INC.9-12
9	A-15132-43G01		VALVE	ﾊﾞﾙﾌﾞ	1	B
10	A-15133-06J01		SPRING,VALVE	ｽﾌﾟﾘﾝｸﾞ	1	B
11	A-05412-1800P		WASHER,SEAL	ﾜｯｼｬ	1	B
12	A-15134-43G01		CAP,VALVE	ｷｬｯﾌﾟ	1	B
13	A-21334-02N00	*	O RING	Oﾘﾝｸﾞ	3	B
14	A-08120-8451E		BOLT&WASHER	ﾎﾞﾙﾄ&ﾜｯｼｬ	3	B
15	A-08120-8201E		BOLT&WASHER	ﾎﾞﾙﾄ&ﾜｯｼｬ	4	B
16	A-15208-43G00		CARTRIDGE,OIL	ｶｰﾄﾘｯｼﾞ	1	B
17	A-08931-5021A		PLUG,TAPER	ﾌﾟﾗｸﾞ	1	B

FIG. 20 OIL COOLER
オイルクーラ

KIT

K1 901

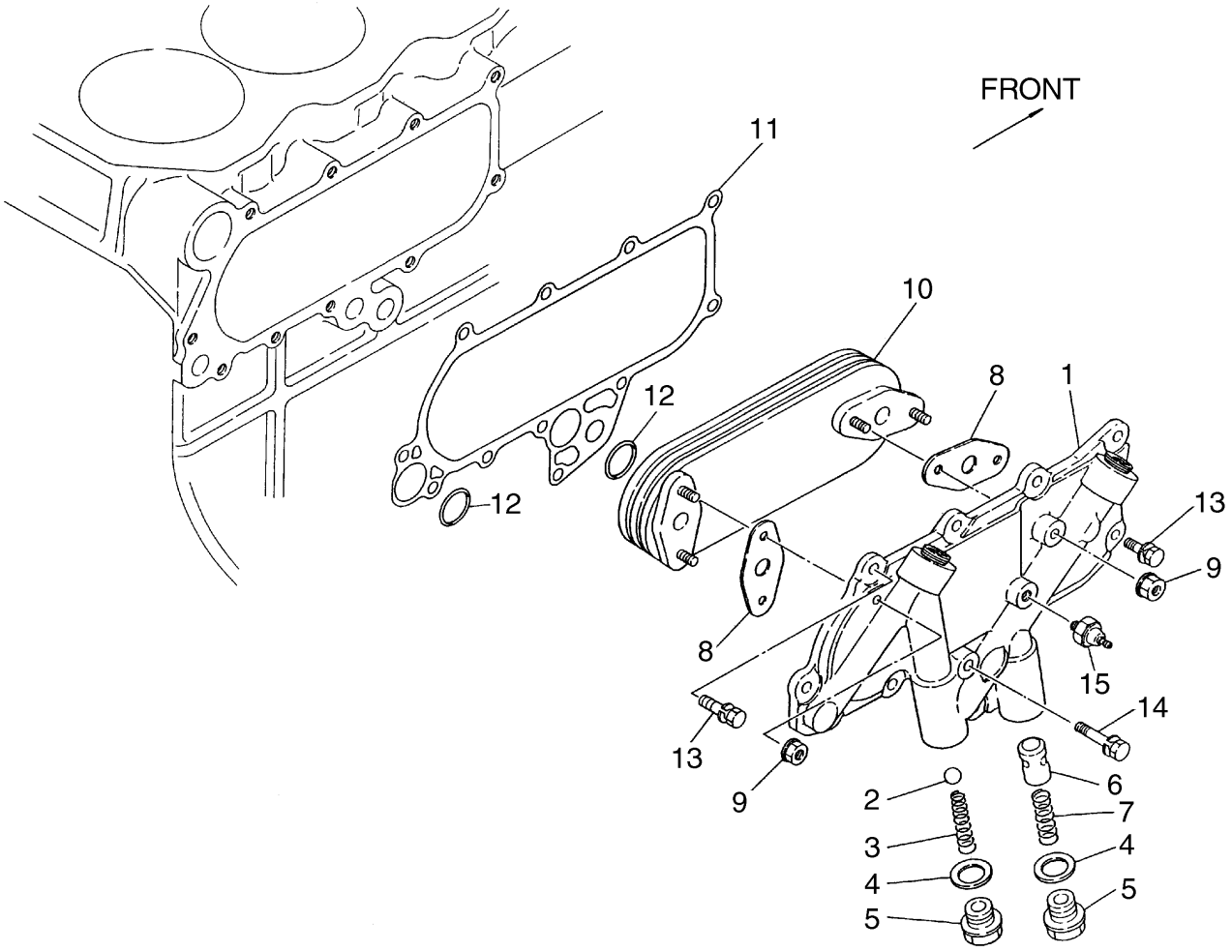

A	2t class	FD20C7, FD20T7, FD20W7, FD25C7, FD25T7, FD25W7,
	3t class	FD30C7, FD30T7, FD30W7,

B	1t class	FHD15C3, FHD15T3, FHD18C3, FHD18T3
	2t class	FD20C3, FD20C13, FD20T3, FD20T13, FD20W3, FD25C3, FD25C13, FD25T3, FD25T13, FD25W3
	3t class	FD30C3, FD30T3, FD30W3

FIG. 20

Item No. 見出番号	Part No. 部品番号	Mark 記号	Description 部品名称		Req'd 個数	Remarks : serial No. 備考：実施号車
A	A-21305-54T02		OIL COOLER ASSY	ｵｲﾙｸｰﾗｱｯｾﾝ	1	INC.1-10
901	A-10101-Z9826	K1	KIT,OVERHAUL	ｵｰﾊﾞﾎｰﾙｷｯﾄ	1	INC.11,12 & etc.
1	A-21320-31N00		HOUSING	ﾊｳｼﾞﾝｸﾞ	1	INC.2-7
2	A-15300-76200		VALVE,SHORT	ﾊﾞﾙﾌﾞ	1	
3	A-15133-54T00		SPRING	ｽﾌﾟﾘﾝｸﾞ	1	
4	A-15304-61501		GASKET	ｶﾞｽｹｯﾄ	2	
5	A-15303-61503		PLUG	ﾌﾟﾗｸﾞ	2	
6	A-15280-90001		VALVE	ﾊﾞﾙﾌﾞ	1	
7	A-15243-31N00		SPRING	ｽﾌﾟﾘﾝｸﾞ	1	
8	A-21334-05D04		GASKET	ｶﾞｽｹｯﾄ	2	
9	A-08911-1081G		NUT&WASHER	ﾅｯﾄ&ﾜｯｼｬ	4	
10	A-21355-54T00		ELEMENT,COOLER	ｴﾚﾒﾝﾄ	1	
11	A-21304-34N00	*	GASKET	ｶﾞｽｹｯﾄ	1	
12	A-21334-02N00	*	O RING	Oﾘﾝｸﾞ	2	
13	A-08120-8251E		BOLT&WASHER	ﾎﾞﾙﾄ&ﾜｯｼｬ	10	
14	A-08120-8451E		BOLT&WASHER	ﾎﾞﾙﾄ&ﾜｯｼｬ	1	
15	A-25240-Z5500		SWITCH,OIL PRESS.	ｽｲｯﾁ	1	

FIG. 21 COOLING FAN (A)
クーリング ファン

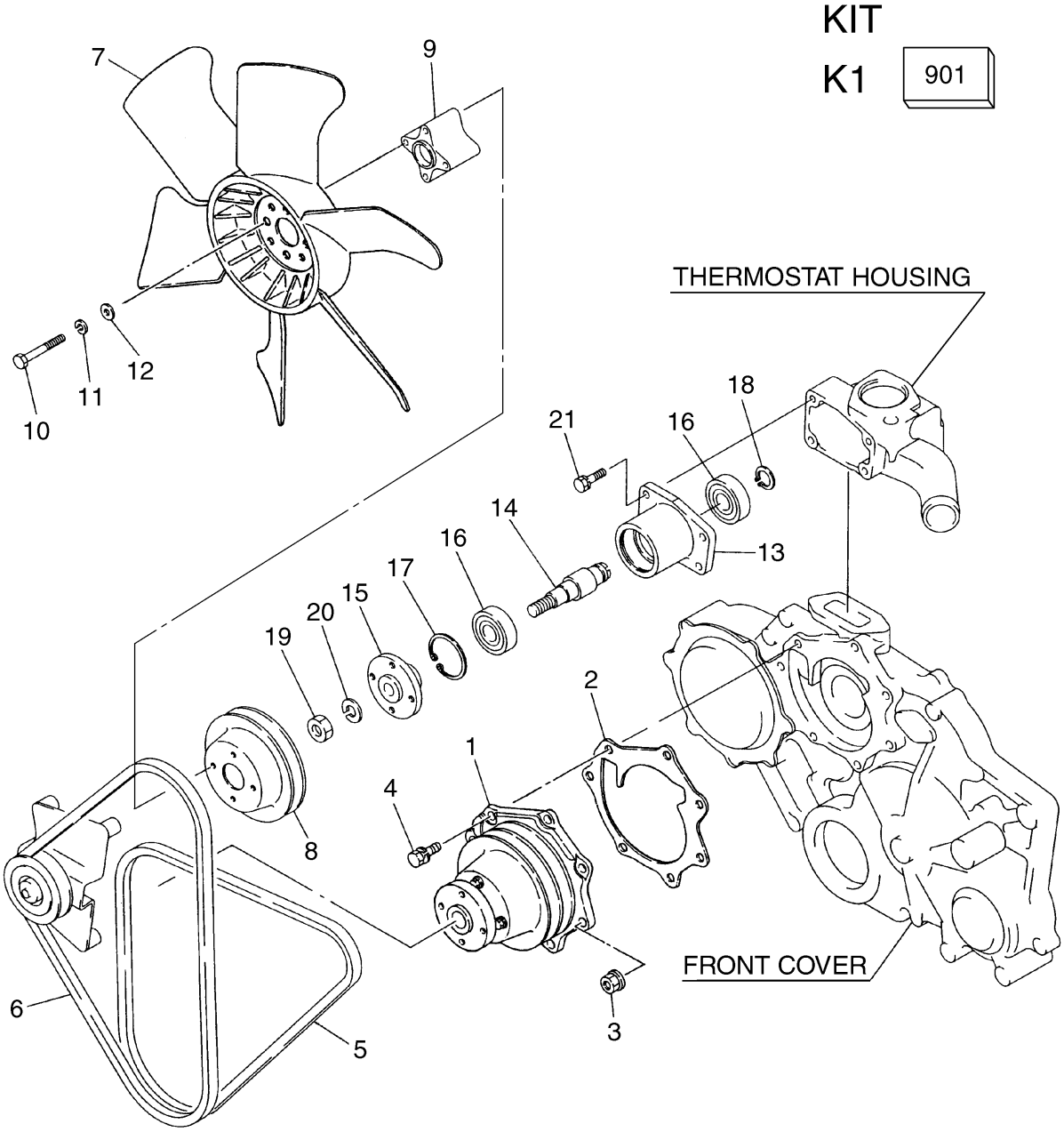

A	2t class	FD20C7, FD20T7, FD20W7, FD25C7, FD25T7, FD25W7,
	3t class	FD30C7, FD30T7, FD30W7,

B	1t class	FHD15C3, FHD15T3, FHD18C3, FHD18T3
	2t class	FD20C3, FD20C13, FD20T3, FD20T13, FD20W3, FD25C3, FD25C13, FD25T3, FD25T13, FD25W3
	3t class	FD30C3, FD30T3, FD30W3

FIG. 21

Item No. 見出番号	Part No. 部品番号	Mark 記号	Description 部品名称		Req'd 個数	Remarks : serial No. 備考：実施号車
901	A-10101-Z9826	K1	KIT,OVERHAUL	ｵｰﾊﾞﾎｰﾙｷｯﾄ	1	A
						INC.2 & etc.
1	A-21010-40K05		PUMP,WATER	ﾎﾟﾝﾌﾟ	1	A
2	A-21014-34N01	*	GASKET	ｶﾞｽｹｯﾄ	1	A
3	A-08918-1401A		NUT&WASHER	ﾅｯﾄ&ﾜｯｼｬ	2	A
4	A-08120-8201E		BOLT&WASHER	ﾎﾞﾙﾄ&ﾜｯｼｬ	5	A
5	A-11720-41K05		V BELT,GENERATOR	Vﾍﾞﾙﾄ	1	A
						STD,UL-DS,24V(GE)
-	A-11720-NA003		V BELT,GENERATOR	Vﾍﾞﾙﾄ	1	A
						OC,HCS
6	A-11720-NA000		V BELT,FAN	Vﾍﾞﾙﾄ	1	A
						STD,24V(GE)
-	A-11720-NA002		V BELT,FAN	Vﾍﾞﾙﾄ	1	A
						OC,HCS,UL-DS
7	A-21060-90073		FAN,COOLING	ﾌｧﾝ	1	A
8	A-21051-44G00		PULLEY	ﾌﾟｰﾘ	1	A:-772198
-	A-21051-NA00A		PULLEY	ﾌﾟｰﾘ	1	A:772199-
9	A-21064-31W00		SPACER	ｽﾍﾟｰｻ	1	A:-772198
-	A-21064-NA00A		SPACER	ｽﾍﾟｰｻ	1	A:772199-
10	A-08170-66510		BOLT	ﾎﾞﾙﾄ	4	A
11	A-08915-33610		WASHER	ﾜｯｼｬ	4	A
12	A-08915-43610		WASHER	ﾜｯｼｬ	4	A
A	A-21046-NA000		BRACKET ASSY,FAN	ﾌﾞﾗｹｯﾄｱｯｾﾝ	1	A
						INC.13-20
13	A-21114-NA000		BRACKET	ﾌﾞﾗｹｯﾄ	1	A
14	A-21048-NA000		SHAFT	ｼｬﾌﾄ	1	A
15	A-21054-NA000		HUB	ﾊﾌﾞ	1	A
16	A-21035-51H00		BEARING	ﾍﾞｱﾘﾝｸﾞ	2	A
17	A-00922-25200		RING,SNAP	ﾘﾝｸﾞ	1	A
18	A-00922-12000		RING,SNAP	ﾘﾝｸﾞ	1	A
19	A-08911-2441A		NUT	ﾅｯﾄ	1	A
20	A-08915-1441A		WASHER	ﾜｯｼｬ	1	A
21	A-08120-8251E		BOLT&WASHER	ﾎﾞﾙﾄ&ﾜｯｼｬ	4	A

FIG. 22 COOLING FAN (B)
クーリング ファン

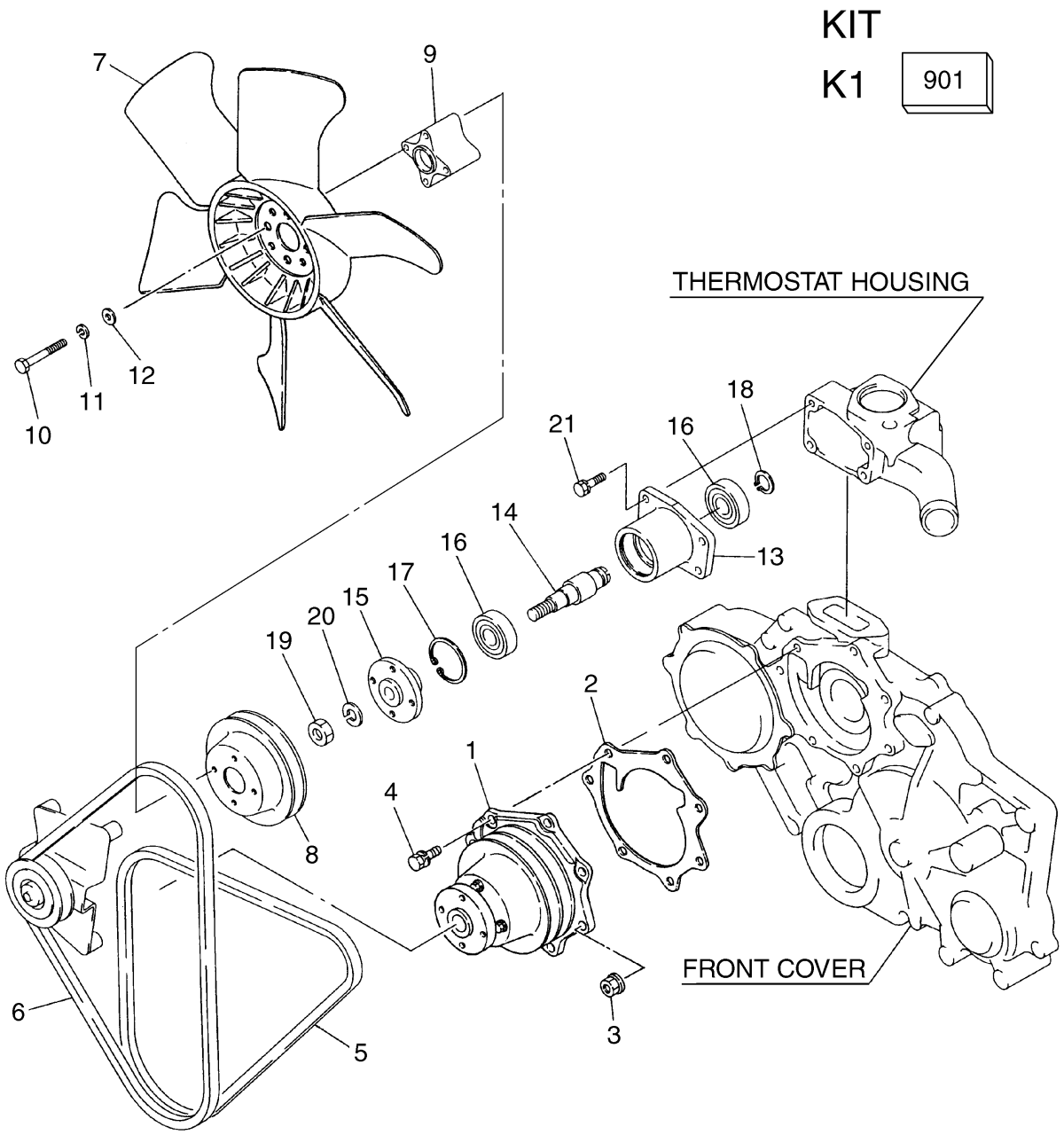

A		
	2t class	FD20C7, FD20T7, FD20W7, FD25C7, FD25T7, FD25W7,
	3t class	FD30C7, FD30T7, FD30W7,

B		
	1t class	FHD15C3, FHD15T3, FHD18C3, FHD18T3
	2t class	FD20C3, FD20C13, FD20T3, FD20T13, FD20W3, FD25C3, FD25C13, FD25T3, FD25T13, FD25W3
	3t class	FD30C3, FD30T3, FD30W3

FIG. 22

Item No. 見出番号	Part No. 部品番号	Mark 記号	Description 部品名称		Req'd 個数	Remarks : serial No. 備考：実施号車
901	A-10101-Z9826	K1	KIT,OVERHAUL	ｵｰﾊﾞﾎｰﾙｷｯﾄ	1	B
						INC.2 & etc.
1	A-21010-40K05		PUMP,WATER	ﾎﾟﾝﾌﾟ	1	B
2	A-21014-34N01	*	GASKET	ｶﾞｽｹｯﾄ	1	B
3	A-08918-1401A		NUT&WASHER	ﾅｯﾄ&ﾜｯｼｬ	2	B
4	A-08120-8201E		BOLT&WASHER	ﾎﾞﾙﾄ&ﾜｯｼｬ	5	B
5	A-11720-41K05		V BELT,GENERATOR	Vﾍﾞﾙﾄ	1	B
						STD
-	A-11720-NA003		V BELT,GENERATOR	Vﾍﾞﾙﾄ	1	B
						OC
6	A-11720-NA000		V BELT,FAN	Vﾍﾞﾙﾄ	1	B
						STD
-	A-11720-NA002		V BELT,FAN	Vﾍﾞﾙﾄ	1	B
						OC
7	A-21060-90073		FAN,COOLING	ﾌｧﾝ	1	B
8	A-21051-44G00		PULLEY	ﾌﾟｰﾘ	1	B:-772198
-	A-21051-NA00A		PULLEY	ﾌﾟｰﾘ	1	B:772199-
9	A-21064-31W00		SPACER	ｽﾍﾟｰｻ	1	B:-772198
-	A-21064-NA00A		SPACER	ｽﾍﾟｰｻ	1	B:772199-
10	A-08170-66510		BOLT	ﾎﾞﾙﾄ	4	B
11	A-08915-33610		WASHER	ﾜｯｼｬ	4	B
12	A-08915-43610		WASHER	ﾜｯｼｬ	4	B
A	A-21046-NA000		BRACKET ASSY,FAN	ﾌﾞﾗｹｯﾄｱｯｾﾝ	1	B
						INC.13-20
13	A-21114-NA000		BRACKET	ﾌﾞﾗｹｯﾄ	1	B
14	A-21048-NA000		SHAFT	ｼｬﾌﾄ	1	B
15	A-21054-NA000		HUB	ﾊﾌﾞ	1	B
16	A-21035-51H00		BEARING	ﾍﾞｱﾘﾝｸﾞ	2	B
17	A-00922-25200		RING,SNAP	ﾘﾝｸﾞ	1	B
18	A-00922-12000		RING,SNAP	ﾘﾝｸﾞ	1	B
19	A-08911-2441A		NUT	ﾅｯﾄ	1	B
20	A-08915-1441A		WASHER	ﾜｯｼｬ	1	B
21	A-08120-8251E		BOLT&WASHER	ﾎﾞﾙﾄ&ﾜｯｼｬ	4	B

FIG. 23 THERMOSTAT HOUSING
サーモスタットハウジング

KIT

K1 901

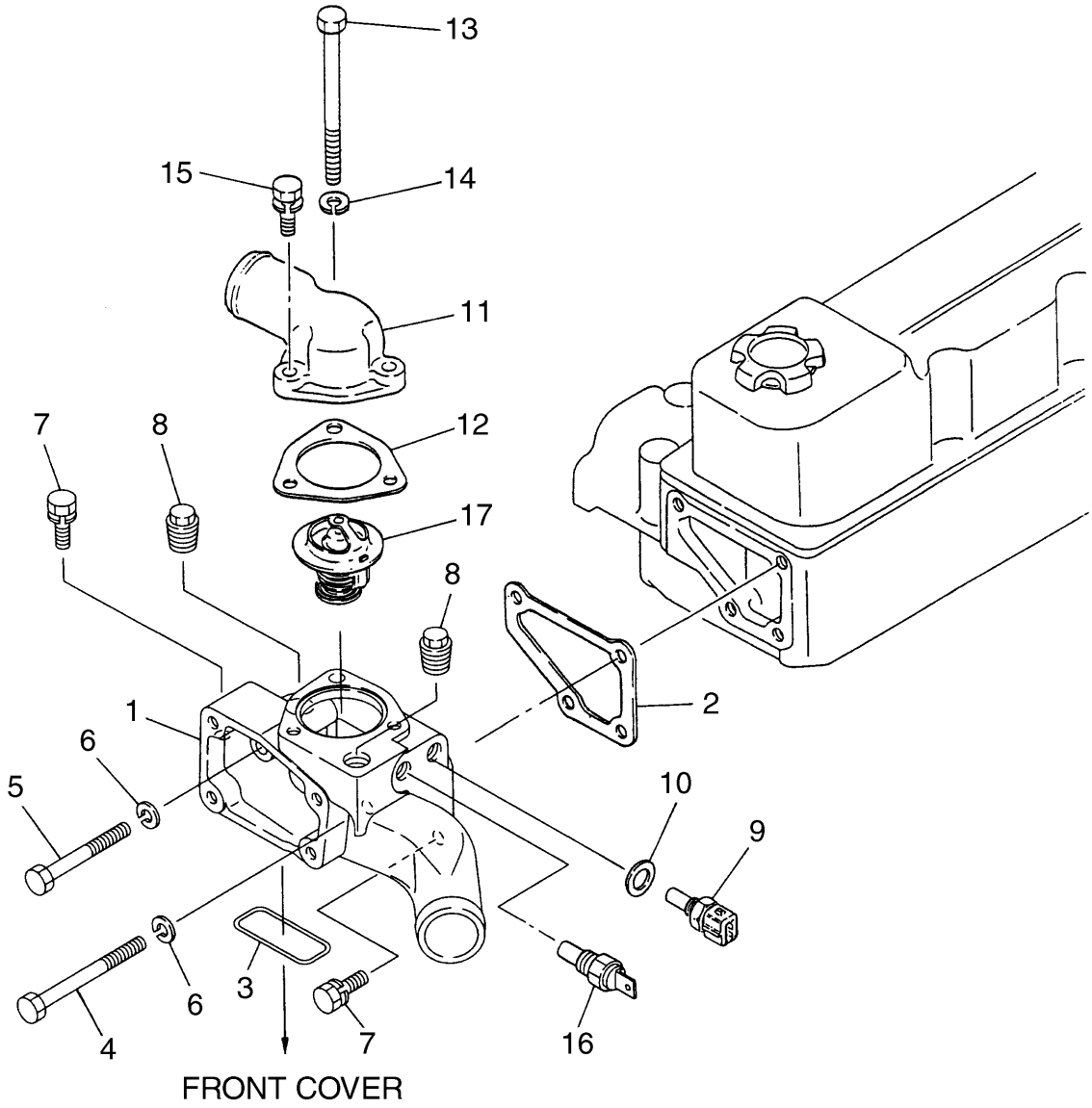

A	2t class	FD20C7, FD20T7, FD20W7, FD25C7, FD25T7, FD25W7,
	3t class	FD30C7, FD30T7, FD30W7,

B	1t class	FHD15C3, FHD15T3, FHD18C3, FHD18T3
	2t class	FD20C3, FD20C13, FD20T3, FD20T13, FD20W3, FD25C3, FD25C13, FD25T3, FD25T13, FD25W3
	3t class	FD30C3, FD30T3, FD30W3

FIG. 23

Item No. 見出番号	Part No. 部品番号	Mark 記号	Description 部品名称		Req'd 個数	Remarks : serial No. 備考：実施号車
901	A-10101-Z9826	K1	KIT,OVERHAUL	ｵｰﾊﾞﾎｰﾙｷｯﾄ	1	INC.2,3,12 & etc.
1	A-11061-NA003		HOUSING,THERMOSTAT	ﾊｳｼﾞﾝｸﾞ	1	
2	A-11072-34N02	*	GASKET	ｶﾞｽｹｯﾄ	1	
3	A-14465-43G02	*	SEAL,RUBBER	ｼｰﾙ	1	
4	A-08120-8901A		BOLT	ﾎﾞﾙﾄ	1	
5	A-08120-8751A		BOLT	ﾎﾞﾙﾄ	1	
6	A-08915-1381A		WASHER	ﾜｯｼｬ	2	
7	A-08120-8251E		BOLT&WASHER	ﾎﾞﾙﾄ&ﾜｯｼｬ	3	
8	A-11021-J2000		PLUG,TAPER	ﾌﾟﾗｸﾞ	2	
9	A-22630-10G00		SENSOR,WATER THERMO	ｾﾝｻ	1	
10	A-16794-10G00		GASKET	ｶﾞｽｹｯﾄ	1	
11	A-11060-43G00		OUTLET,WATER	ｱｳﾄﾚｯﾄ	1	
12	A-11062-34N01	*	GASKET	ｶﾞｽｹｯﾄ	1	
13	A-08120-8031A		BOLT	ﾎﾞﾙﾄ	1	
14	A-08915-1381A		WASHER	ﾜｯｼｬ	1	
15	A-08120-8251E		BOLT&WASHER	ﾎﾞﾙﾄ&ﾜｯｼｬ	2	
16	A-25080-89903		GAUGE,WATER THERMO	ｹﾞｰｼﾞ	1	
17	A-21200-05D02		THERMOSTAT	ｻｰﾓｽﾀｯﾄ	1	82℃

FIG. 24 FUEL PIPING
ﾌｭｰｴﾙﾊﾟｲﾋﾟﾝｸﾞ

KIT

K1 901

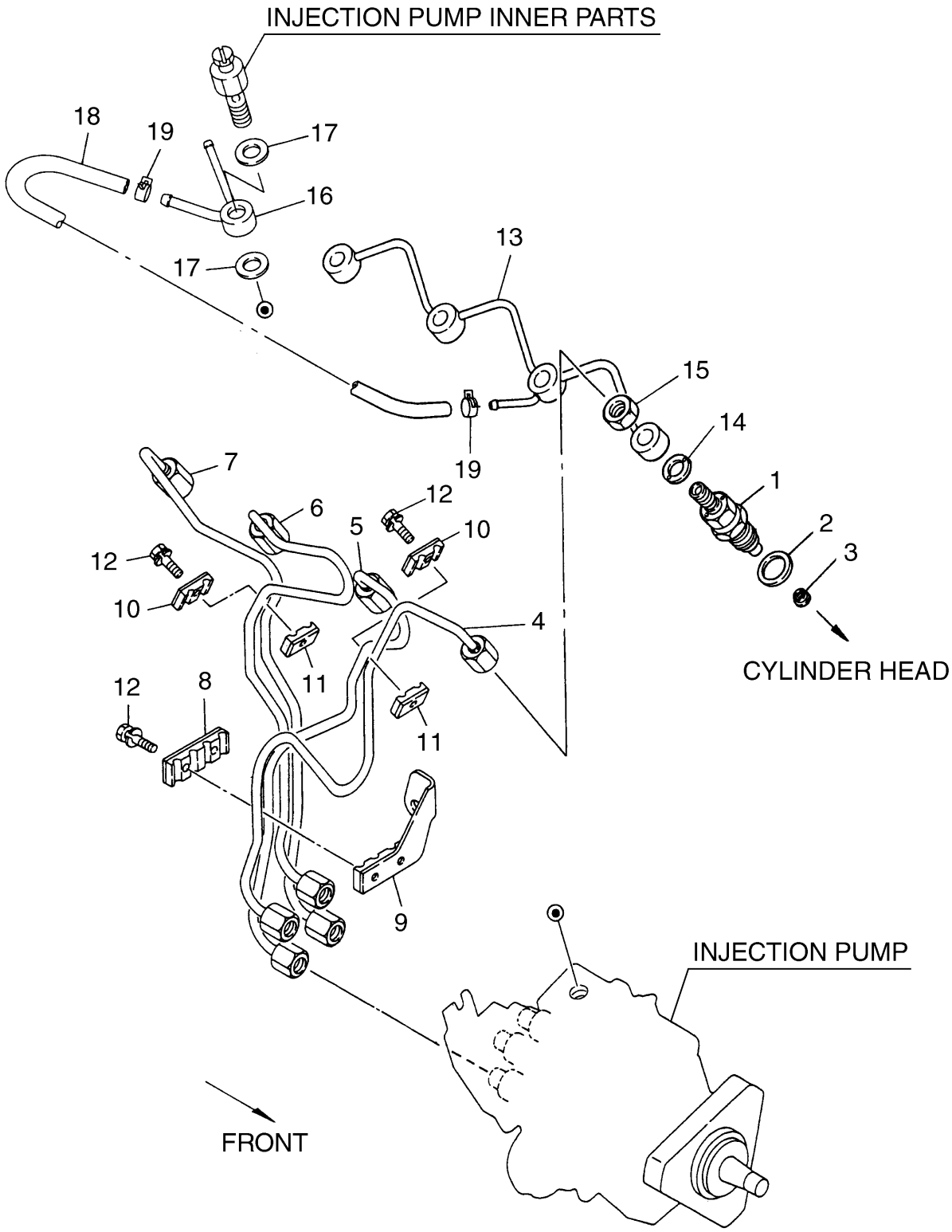

A	2t class	FD20C7, FD20T7, FD20W7, FD25C7, FD25T7, FD25W7,
	3t class	FD30C7, FD30T7, FD30W7,

B	1t class	FHD15C3, FHD15T3, FHD18C3, FHD18T3
	2t class	FD20C3, FD20C13, FD20T3, FD20T13, FD20W3, FD25C3, FD25C13, FD25T3, FD25T13, FD25W3
	3t class	FD30C3, FD30T3, FD30W3

FIG. 24

Item No. 見出番号	Part No. 部品番号	Mark 記号	Description 部品名称		Req'd 個数	Remarks : serial No. 備考：実施号車
901	A-16600-43G23	K1	KIT,NOZZLE	ﾉｽﾞﾙｷｯﾄ	4	INC.1-3
1	A-16600-43G03	*	NOZZLE & HOLDER	ﾉｽﾞﾙ&ﾎﾙﾀﾞ	4	SEE FIG.25
2	A-16625-43G00	*	WASHER	ﾜｯｼｬ	4	
3	A-16626-43G00	*	GASKET	ｶﾞｽｹｯﾄ	4	
4	A-16680-40K00		TUBE,NO.1	ﾁｭｰﾌﾞ	1	
5	A-16681-40K00		TUBE,NO.2	ﾁｭｰﾌﾞ	1	
6	A-16682-40K00		TUBE,NO.3	ﾁｭｰﾌﾞ	1	
7	A-16683-40K00		TUBE,NO.4	ﾁｭｰﾌﾞ	1	
8	A-16696-43G01		SUPPORT,TUBE	ｻﾎﾟｰﾄ	1	
9	A-16697-21N00		SUPPORT,TUBE	ｻﾎﾟｰﾄ	1	
10	A-16698-43G01		SUPPORT,TUBE	ｻﾎﾟｰﾄ	2	
11	A-16699-43G00		SUPPORT,TUBE	ｻﾎﾟｰﾄ	2	
12	A-08120-62528		BOLT&WASHER	ﾎﾞﾙﾄ&ﾜｯｼｬ	4	
13	A-16670-43G00		TUBE	ﾁｭｰﾌﾞ	1	
14	A-16627-43G00		GASKET	ｶﾞｽｹｯﾄ	4	
15	A-16666-43G00		NUT	ﾅｯﾄ	4	
16	A-16678-43G01		CONNECTOR	ｺﾈｸﾀ	1	
17	A-16794-10G00		GASKET	ｶﾞｽｹｯﾄ	2	
18	A-16445-2S000		HOSE	ﾎｰｽ	1	INC.19
19	A-01558-00111		CLAMP,HOSE	ｸﾗﾝﾌﾟ	2	

FIG. 25 NOZZLE & HOLDER(INNER PARTS)
ﾉｽﾞﾙ&ﾎﾙﾀﾞ(ｲﾝﾅﾊﾟｰﾂ)

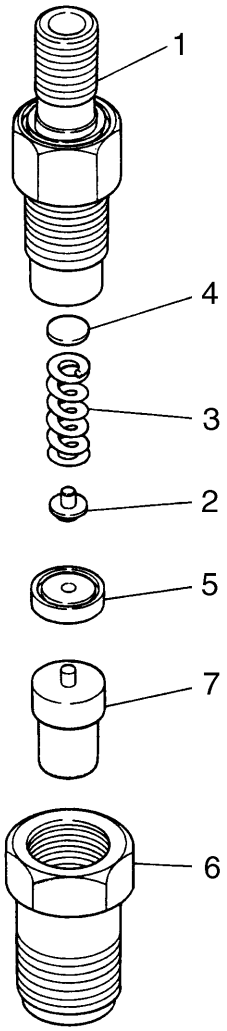

A	2t class	FD20C7, FD20T7, FD20W7, FD25C7, FD25T7, FD25W7,
	3t class	FD30C7, FD30T7, FD30W7,

B	1t class	FHD15C3, FHD15T3, FHD18C3, FHD18T3
	2t class	FD20C3, FD20C13, FD20T3, FD20T13, FD20W3, FD25C3, FD25C13, FD25T3, FD25T13, FD25W3
	3t class	FD30C3, FD30T3, FD30W3

FIG. 25

Item No. 見出番号	Part No. 部品番号	Mark 記号	Description 部品名称		Req'd 個数	Remarks : serial No. 備考：実施号車
A	A-16600-43G03		NOZZLE & HOLDER ASSY	ﾉｽﾞﾙ&ﾎﾙﾀﾞｱｯｾﾝ	4	INC.1-7
1	A-16610-43G01		HOLDER	ﾎﾙﾀﾞ	4	INC.2-6
2	A-16612-43G00		PUSH ROD	ﾌﾟｯｼｭﾛｯﾄﾞ	4	
3	A-16615-43G00		SPRING	ｽﾌﾟﾘﾝｸﾞ	4	
4	A-16613-43G00		SHIM	ｼﾑ	AR	t=0.10mm
-	A-16613-43G01		SHIM	ｼﾑ	AR	t=0.20mm
-	A-16613-43G02		SHIM	ｼﾑ	AR	t=0.30mm
-	A-16613-43G03		SHIM	ｼﾑ	AR	t=0.40mm
-	A-16613-43G04		SHIM	ｼﾑ	AR	t=0.50mm
-	A-16613-43G05		SHIM	ｼﾑ	AR	t=0.52mm
-	A-16613-43G06		SHIM	ｼﾑ	AR	t=0.54mm
-	A-16613-43G07		SHIM	ｼﾑ	AR	t=0.56mm
-	A-16613-43G08		SHIM	ｼﾑ	AR	t=0.58mm
-	A-16613-43G09		SHIM	ｼﾑ	AR	t=0.80mm
5	A-16616-43G00		PIECE,DISTANCE	ﾋﾟｰｽ	4	
6	A-16629-43G01		NUT	ﾅｯﾄ	4	
7	A-16620-43G02		NOZZLE	ﾉｽﾞﾙ	4	

FIG. 26 FUEL INJECTION PUMP(FITTING PARTS) (A)
ﾌｭｰｴﾙｲﾝｼﾞｪｸｼｮﾝﾎﾟﾝﾌﾟ(ﾌｨｯﾃｨﾝｸﾞﾊﾟｰﾂ)

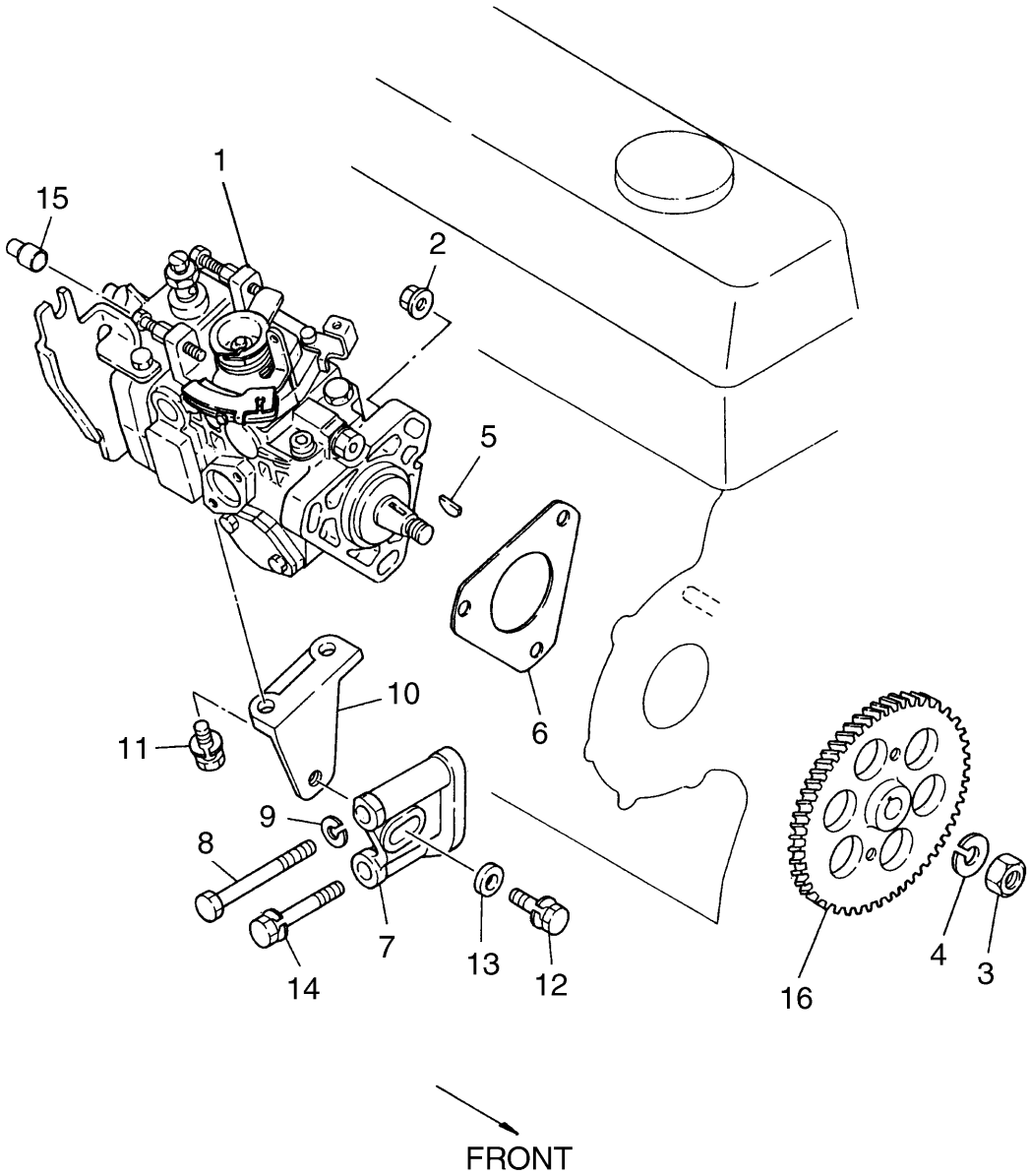

A		
	2t class	FD20C7, FD20T7, FD20W7, FD25C7, FD25T7, FD25W7,
	3t class	FD30C7, FD30T7, FD30W7,

B		
	1t class	FHD15C3, FHD15T3, FHD18C3, FHD18T3
	2t class	FD20C3, FD20C13, FD20T3, FD20T13, FD20W3, FD25C3, FD25C13, FD25T3, FD25T13, FD25W3
	3t class	FD30C3, FD30T3, FD30W3

FIG. 26

Item No. 見出番号	Part No. 部品番号	Mark 記号	Description 部品名称		Req'd 個数	Remarks : serial No. 備考：実施号車
901	A-10101-Z9826	K1	KIT,OVERHAUL	ｵｰﾊﾞﾎｰﾙｷｯﾄ	1	A INC.6 & etc.
1	A-16700-40K11		INJECTION PUMP	ｲﾝｼﾞｪｸｼｮﾝﾎﾟﾝﾌﾟ	1	A:-732742 STD SEE FIG.28 & FIG.29
-	A-16700-NA002		INJECTION PUMP	ｲﾝｼﾞｪｸｼｮﾝﾎﾟﾝﾌﾟ	1	A:732743- STD,OC SEE FIG.28A & FIG.29A
-	A-16700-0K701		PUMP,INJECTION	ﾎﾟﾝﾌﾟ	1	A INC.17-19 HCS,UL-DS
-	A-16700-40K08		PUMP,INJECTION	ﾎﾟﾝﾌﾟ	1	A 24V(GE)
2	A-08918-2081A		NUT&WASHER	ﾅｯﾄ&ﾜｯｼｬ	3	A
3	A-01211-01054		NUT	ﾅｯﾄ	1	A
4	A-08915-1421A		WASHER	ﾜｯｼｬ	1	A
5	A-16742-37501		KEY,WOODRUFF	ｷｰ	1	A
6	A-16701-R8100	*	GASKET	ｶﾞｽｹｯﾄ	1	A
7	A-16811-54T00		BRACKET,PUMP	ﾌﾞﾗｹｯﾄ	1	A
8	A-08121-0901A		BOLT	ﾎﾞﾙﾄ	1	A
9	A-08915-1401A		WASHER	ﾜｯｼｬ	1	A
10	A-16814-43G01		SUPPORT,PUMP	ｻﾎﾟｰﾄ	1	A
11	A-08121-0201E		BOLT&WASHER	ﾎﾞﾙﾄ&ﾜｯｼｬ	2	A
12	A-08121-0301E		BOLT&WASHER	ﾎﾞﾙﾄ&ﾜｯｼｬ	1	A
13	A-16420-43G00		WASHER	ﾜｯｼｬ	1	A
14	A-08121-0701E		BOLT&WASHER	ﾎﾞﾙﾄ&ﾜｯｼｬ	1	A
15	A-19270-35V10		CAP,STOPPER	ｷｬｯﾌﾟ	1	A
16	A-16735-40K00		GEAR,DRIVE	ｷﾞﾔｰ	1	A
17	A-19270-0K702	+	TAMPER	ﾀﾝﾊﾟ	1	A HCS,UL-DS
18	A-19270-0K703	+	TAMPER	ﾀﾝﾊﾟ	1	A HCS,UL-DS
19	A-19270-0K704	+	TAMPER	ﾀﾝﾊﾟ	1	A HCS,UL-DS

FIG. 27 FUEL INJECTION PUMP(FITTING PARTS) (B)
ﾌｭｰｴﾙｲﾝｼﾞｪｸｼｮﾝﾎﾟﾝﾌﾟ (ﾌｨｯﾃｨﾝｸﾞﾊﾟｰﾂ)

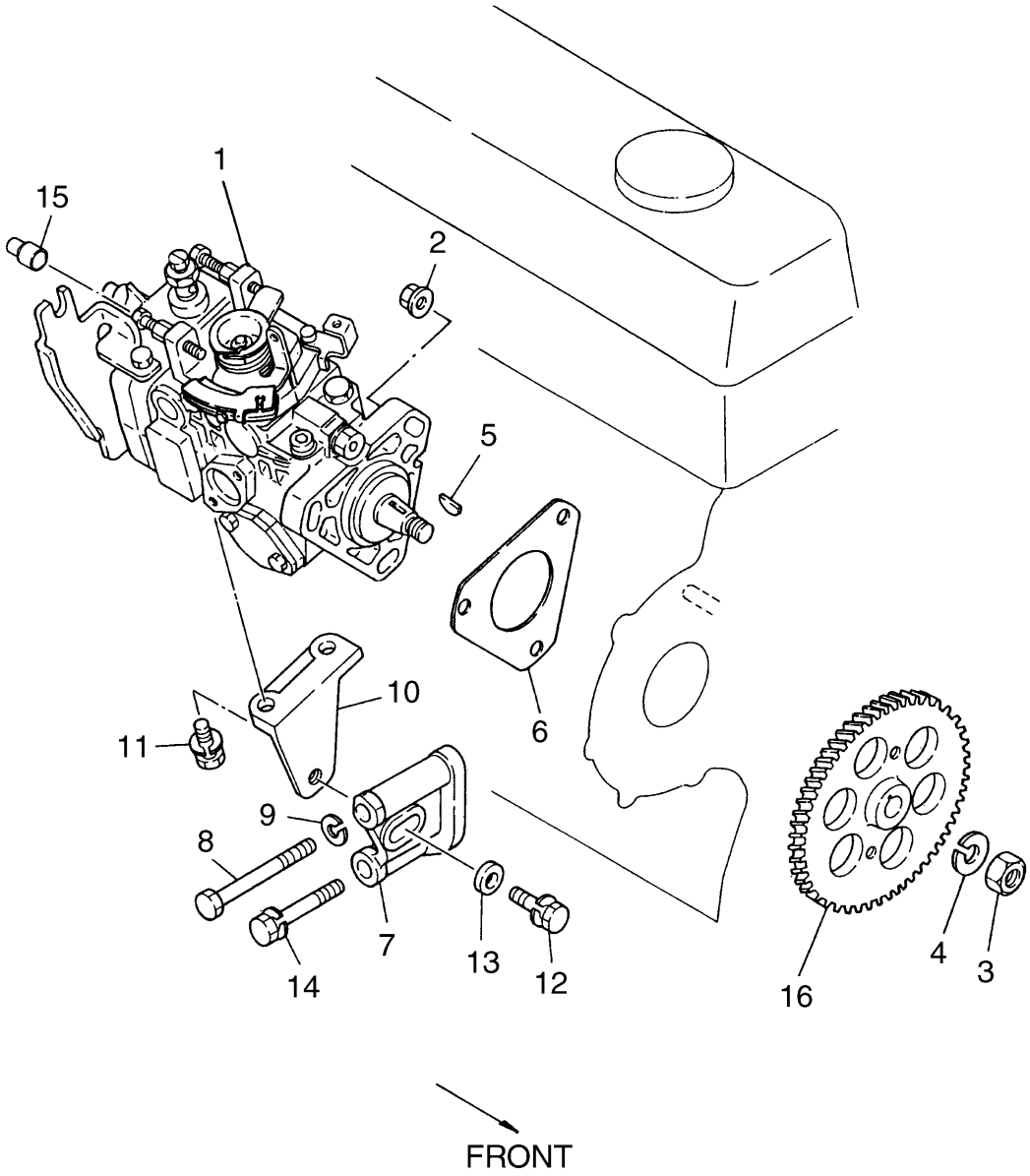

A	2t class	FD20C7, FD20T7, FD20W7, FD25C7, FD25T7, FD25W7,
	3t class	FD30C7, FD30T7, FD30W7,

B	1t class	FHD15C3, FHD15T3, FHD18C3, FHD18T3
	2t class	FD20C3, FD20C13, FD20T3, FD20T13, FD20W3, FD25C3, FD25C13, FD25T3, FD25T13, FD25W3
	3t class	FD30C3, FD30T3, FD30W3

FIG. 27

Item No. 見出番号	Part No. 部品番号	Mark 記号	Description 部品名称		Req'd 個数	Remarks : serial No. 備考：実施号車
901	A-10101-Z9826	K1	KIT,OVERHAUL	ｵｰﾊﾞﾎｰﾙｷｯﾄ	1	B INC.6 & etc.
1	A-16700-40K11		INJECTION PUMP	ｲﾝｼﾞｪｸｼｮﾝﾎﾟﾝﾌﾟ	1	B:-732742 STD SEE FIG.28 & FIG.29
-	A-16700-NA002		INJECTION PUMP	ｲﾝｼﾞｪｸｼｮﾝﾎﾟﾝﾌﾟ	1	B:732743- STD,OC SEE FIG.28A & FIG.29A
2	A-08918-2081A		NUT&WASHER	ﾅｯﾄ&ﾜｯｼｬ	3	B
3	A-01211-01054		NUT	ﾅｯﾄ	1	B
4	A-08915-1421A		WASHER	ﾜｯｼｬ	1	B
5	A-16742-37501		KEY,WOODRUFF	ｷｰ	1	B
6	A-16701-R8100	*	GASKET	ｶﾞｽｹｯﾄ	1	B
7	A-16811-54T00		BRACKET,PUMP	ﾌﾞﾗｹｯﾄ	1	B
8	A-08121-0901A		BOLT	ﾎﾞﾙﾄ	1	B
9	A-08915-1401A		WASHER	ﾜｯｼｬ	1	B
10	A-16814-43G01		SUPPORT,PUMP	ｻﾎﾟｰﾄ	1	B
11	A-08121-0201E		BOLT&WASHER	ﾎﾞﾙﾄ&ﾜｯｼｬ	2	B
12	A-08121-0301E		BOLT&WASHER	ﾎﾞﾙﾄ&ﾜｯｼｬ	1	B
13	A-16420-43G00		WASHER	ﾜｯｼｬ	1	B
14	A-08121-0701E		BOLT&WASHER	ﾎﾞﾙﾄ&ﾜｯｼｬ	1	B
15	A-19270-35V10		CAP,STOPPER	ｷｬｯﾌﾟ	1	B
16	A-16735-40K00		GEAR,DRIVE	ｷﾞﾔｰ	1	B

FIG. 28 FUEL INJECTION PUMP(INNER PARTS)(1/2)(FOR STD)(-732742)
ﾌｭｰｴﾙｲﾝｼﾞｪｸｼｮﾝﾎﾟﾝﾌﾟ(ｲﾝﾅﾊﾟｰﾂ)(STD用)

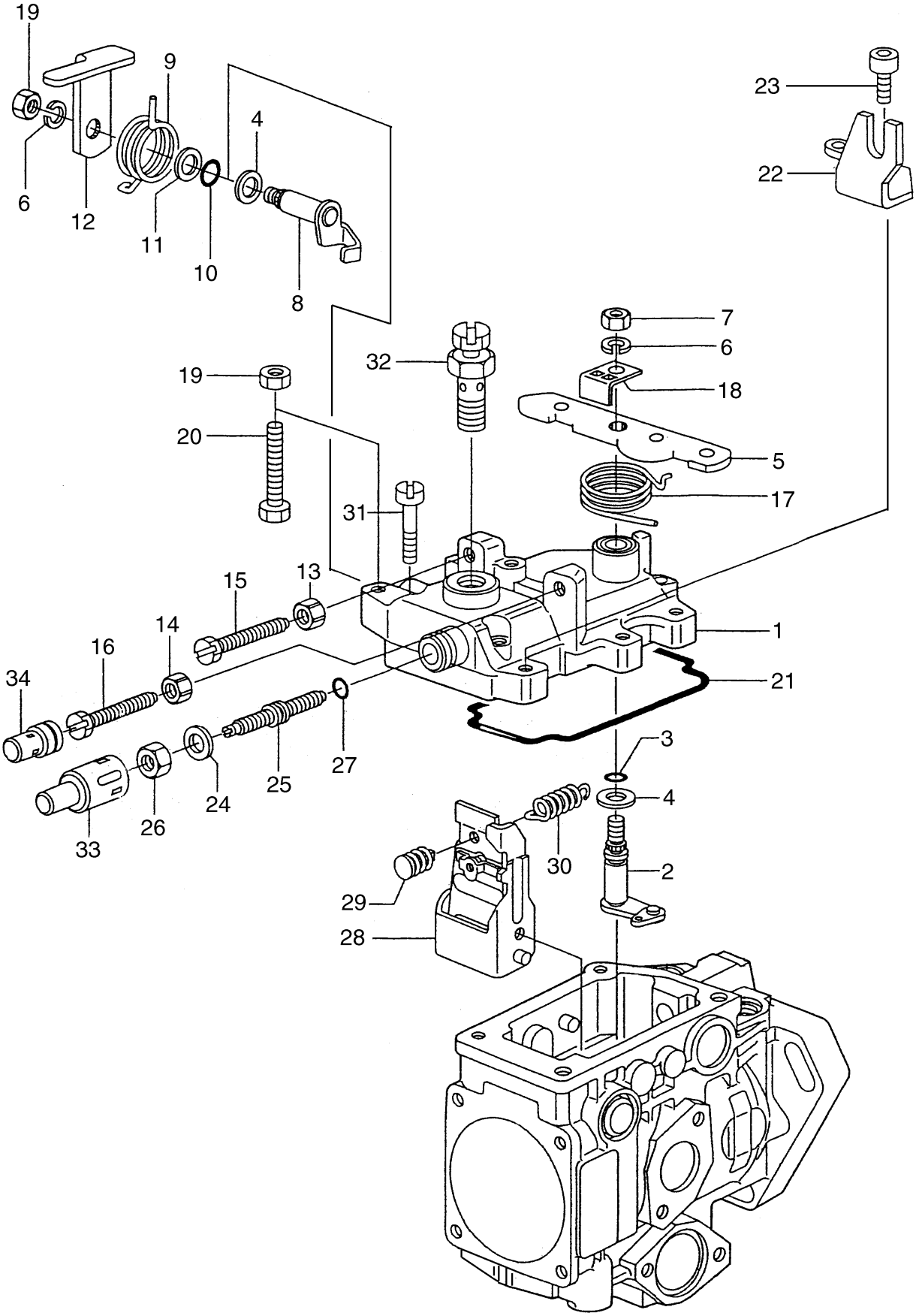

A	2t class	FD20C7, FD20T7, FD20W7, FD25C7, FD25T7, FD25W7,
	3t class	FD30C7, FD30T7, FD30W7,

B	1t class	FHD15C3, FHD15T3, FHD18C3, FHD18T3
	2t class	FD20C3, FD20C13, FD20T3, FD20T13, FD20W3, FD25C3, FD25C13, FD25T3, FD25T13, FD25W3
	3t class	FD30C3, FD30T3, FD30W3

FIG. 28

Item No. 見出番号	Part No. 部品番号	Mark 記号	Description 部品名称		Req'd 個数	Remarks : serial No. 備考：実施号車
A1	A-16700-40K11		INJECTION PUMP ASSY	ｲﾝｼﾞｪｸｼｮﾝﾎﾟﾝﾌﾟ ｱｯｾﾝ	1	INC.1-27 & etc.
A2	A-146822-0220		COVER ASSY	ｶﾊﾞｰｱｯｾﾝ	1	INC.1-27
1	A-146805-2120		COVER,GOVERNOR	ｶﾊﾞｰ	1	
2	A-146515-0320		SHAFT,CONTROL	ｼｬﾌﾄ	1	
3	A-146600-0100		O RING	Oﾘﾝｸﾞ	1	
4	A-139310-0200		WASHER	ﾜｯｼｬ	2	
5	A-146530-0000		LEVER	ﾚﾊﾞｰ	AR	
-	A-146530-0100		LEVER	ﾚﾊﾞｰ	AR	
6	A-014110-6440		WASHER	ﾜｯｼｬ	2	
7	A-013020-6040		NUT	ﾅｯﾄ	1	
8	A-146515-1820		SHAFT,LEVER	ｼｬﾌﾄ	1	
9	A-146592-0400		SPRING	ｽﾌﾟﾘﾝｸﾞ	1	
10	A-146600-0200		O RING	Oﾘﾝｸﾞ	1	
11	A-146602-0100		WASHER	ﾜｯｼｬ	1	
12	A-146540-4000		LEVER	ﾚﾊﾞｰ	AR	
-	A-146540-4100		LEVER	ﾚﾊﾞｰ	AR	
13	A-146621-1700		NUT	ﾅｯﾄ	1	
14	A-146621-1700		NUT	ﾅｯﾄ	1	
15	A-146526-2800		BOLT	ﾎﾞﾙﾄ	1	
16	A-146526-6400		BOLT	ﾎﾞﾙﾄ	1	
17	A-146594-0600		SPRING	ｽﾌﾟﾘﾝｸﾞ	1	
18	A-146541-0000		ANGLE	ｱﾝｸﾞﾙ	1	
19	A-013020-6040		NUT	ﾅｯﾄ	2	
20	A-139006-0200		BOLT	ﾎﾞﾙﾄ	1	
21	A-146600-4400		RING,SEAL	ﾘﾝｸﾞ	1	
22	A-146936-1100		BRACKET	ﾌﾞﾗｹｯﾄ	1	
23	A-010206-1040		BOLT	ﾎﾞﾙﾄ	1	
24	A-139308-0300		WASHER	ﾜｯｼｬ	1	
25	A-146545-3400		SCREW,LOAD	ｽｸﾘｭ	AR	L=53
-	A-146545-3500		SCREW,LOAD	ｽｸﾘｭ	AR	L=55
-	A-146545-3600		SCREW,LOAD	ｽｸﾘｭ	AR	L=57
26	A-139208-0900		NUT	ﾅｯﾄ	1	
27	A-146600-1200		O RING	Oﾘﾝｸﾞ	1	
28	A-146861-0120		LEVER,GOVERNOR	ﾚﾊﾞｰ	1	
29	A-146579-2720		PIN,RETAINING	ﾋﾟﾝ	AR	
-	A-146579-2820		PIN,RETAINING	ﾋﾟﾝ	AR	
-	A-146579-2120		PIN,RETAINING	ﾋﾟﾝ	AR	
30	A-146580-3900		SPRING	ｽﾌﾟﾘﾝｸﾞ	1	
31	A-139106-0200		SCREW	ｽｸﾘｭ	4	
32	A-146120-0120		VALVE,OVER FLOW	ﾊﾞﾙﾌﾞ	1	
33	A-146598-1000		CAP	ｷｬｯﾌﾟ	1	
34	A-146598-0600		CAP	ｷｬｯﾌﾟ	AR	L=18
-	A-146598-0700		CAP	ｷｬｯﾌﾟ	AR	L=21
-	A-146598-0800		CAP	ｷｬｯﾌﾟ	AR	L=24
-	A-146598-0900		CAP	ｷｬｯﾌﾟ	AR	L=27

FIG. 28A FUEL INJECTION PUMP(INNER PARTS)(1/2)(FOR STD & OC)(732743-)
ﾌｭｰｴﾙｲﾝｼﾞｪｸｼｮﾝﾎﾟﾝﾌﾟ(ｲﾝﾅﾊﾟｰﾂ)(STD&OC用)

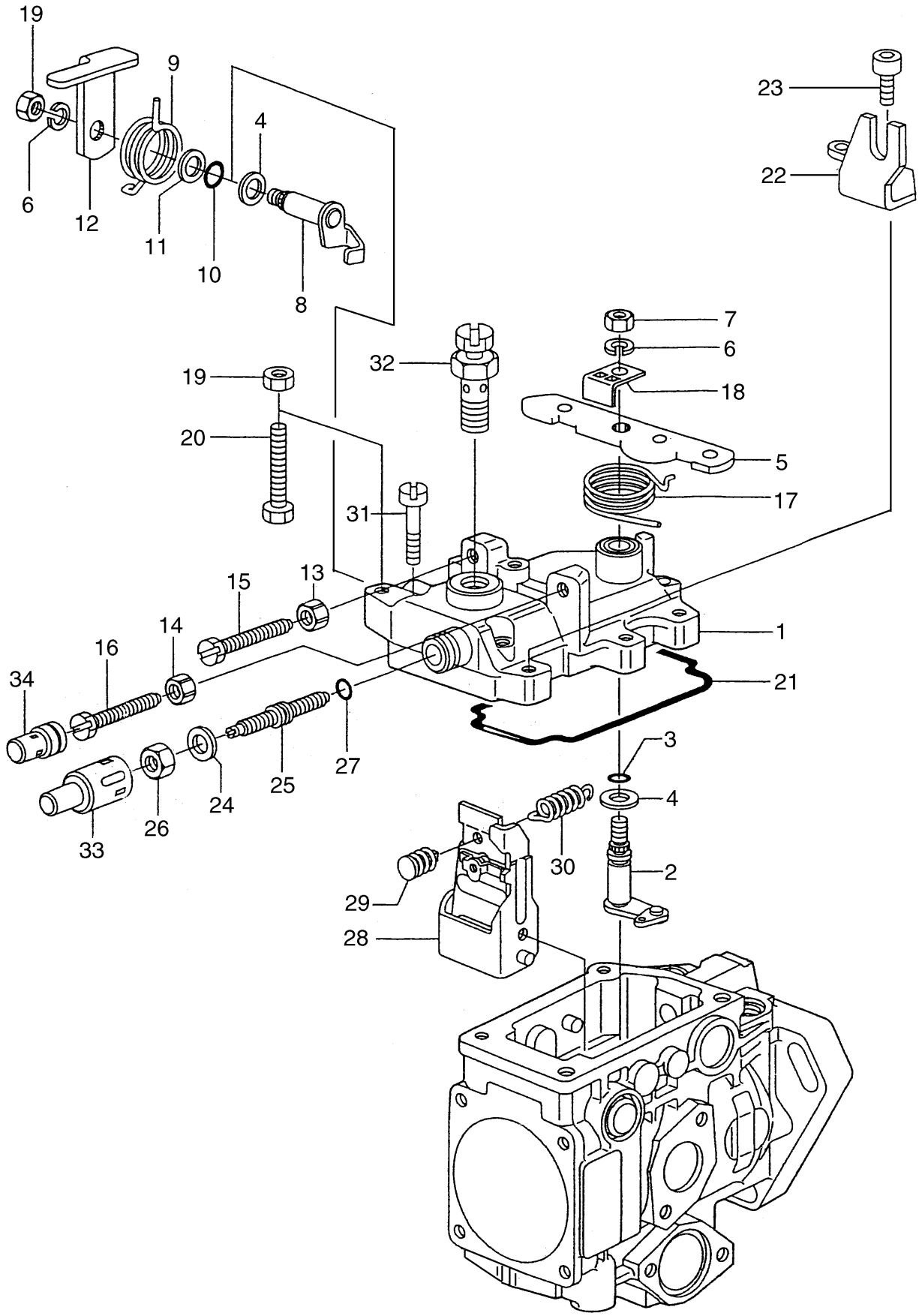

A		
	2t class	FD20C7, FD20T7, FD20W7, FD25C7, FD25T7, FD25W7,
	3t class	FD30C7, FD30T7, FD30W7,

B		
	1t class	FHD15C3, FHD15T3, FHD18C3, FHD18T3
	2t class	FD20C3, FD20C13, FD20T3, FD20T13, FD20W3, FD25C3, FD25C13, FD25T3, FD25T13, FD25W3
	3t class	FD30C3, FD30T3, FD30W3

FIG. 28A

Item No. 見出番号	Part No. 部品番号	Mark 記号	Description 部品名称		Req'd 個数	Remarks : serial No. 備考：実施号車
A1	A-16700-NA002		INJECTION PUMP ASSY	ｲﾝｼﾞｪｸｼｮﾝﾎﾟﾝﾌﾟ ｱｯｾﾝ	1	INC.1-27 & etc.
A2	A-146822-0220		COVER ASSY	ｶﾊﾞｰｱｯｾﾝ	1	INC.1-27
1	A-146805-2120		COVER,GOVERNOR	ｶﾊﾞｰ	1	
2	A-146515-0320		SHAFT,CONTROL	ｼｬﾌﾄ	1	
3	A-146600-0100		O RING	Oﾘﾝｸﾞ	1	
4	A-139310-0200		WASHER	ﾜｯｼｬ	2	
5	A-146530-0000		LEVER	ﾚﾊﾞｰ	AR	
-	A-146530-0100		LEVER	ﾚﾊﾞｰ	AR	
6	A-014110-6440		WASHER	ﾜｯｼｬ	2	
7	A-013020-6040		NUT	ﾅｯﾄ	1	
8	A-146515-1820		SHAFT,LEVER	ｼｬﾌﾄ	1	
9	A-146592-0400		SPRING	ｽﾌﾟﾘﾝｸﾞ	1	
10	A-146600-0200		O RING	Oﾘﾝｸﾞ	1	
11	A-146602-0100		WASHER	ﾜｯｼｬ	1	
12	A-146540-4000		LEVER	ﾚﾊﾞｰ	AR	
-	A-146540-4100		LEVER	ﾚﾊﾞｰ	AR	
13	A-146621-1700		NUT	ﾅｯﾄ	1	
14	A-146621-1700		NUT	ﾅｯﾄ	1	
15	A-146526-2800		BOLT	ﾎﾞﾙﾄ	1	
16	A-146526-6400		BOLT	ﾎﾞﾙﾄ	1	
17	A-146594-0600		SPRING	ｽﾌﾟﾘﾝｸﾞ	1	
18	A-146541-0000		ANGLE	ｱﾝｸﾞﾙ	1	
19	A-013020-6040		NUT	ﾅｯﾄ	2	
20	A-139006-0200		BOLT	ﾎﾞﾙﾄ	1	
21	A-146600-4400		RING,SEAL	ﾘﾝｸﾞ	1	
22	A-146936-1100		BRACKET	ﾌﾞﾗｹｯﾄ	1	
23	A-010206-1040		BOLT	ﾎﾞﾙﾄ	1	
24	A-139308-0300		WASHER	ﾜｯｼｬ	1	
25	A-146545-3400		SCREW,LOAD	ｽｸﾘｭ	AR	L=53
-	A-146545-3500		SCREW,LOAD	ｽｸﾘｭ	AR	L=55
-	A-146545-3600		SCREW,LOAD	ｽｸﾘｭ	AR	L=57
26	A-139208-0900		NUT	ﾅｯﾄ	1	
27	A-146600-1200		O RING	Oﾘﾝｸﾞ	1	
28	A-146861-0120		LEVER,GOVERNOR	ﾚﾊﾞｰ	1	
29	A-146579-2720		PIN,RETAINING	ﾋﾟﾝ	AR	
-	A-146579-2820		PIN,RETAINING	ﾋﾟﾝ	AR	
-	A-146579-2120		PIN,RETAINING	ﾋﾟﾝ	AR	
30	A-146580-3900		SPRING	ｽﾌﾟﾘﾝｸﾞ	1	
31	A-139106-0200		SCREW	ｽｸﾘｭ	4	
32	A-146120-0120		VALVE,OVER FLOW	ﾊﾞﾙﾌﾞ	1	
33	A-146598-1000		CAP	ｷｬｯﾌﾟ	1	
34	A-146598-0600		CAP	ｷｬｯﾌﾟ	AR	L=18
-	A-146598-0700		CAP	ｷｬｯﾌﾟ	AR	L=21
-	A-146598-0800		CAP	ｷｬｯﾌﾟ	AR	L=24
-	A-146598-0900		CAP	ｷｬｯﾌﾟ	AR	L=27

FIG. 29 FUEL INJECTION PUMP(INNER PARTS)(2/2)(FOR STD)(-732742)
ﾌｭｰｴﾙｲﾝｼﾞｪｸｼｮﾝﾎﾟﾝﾌﾟ(ｲﾝﾅﾊﾟｰﾂ)(STD用)

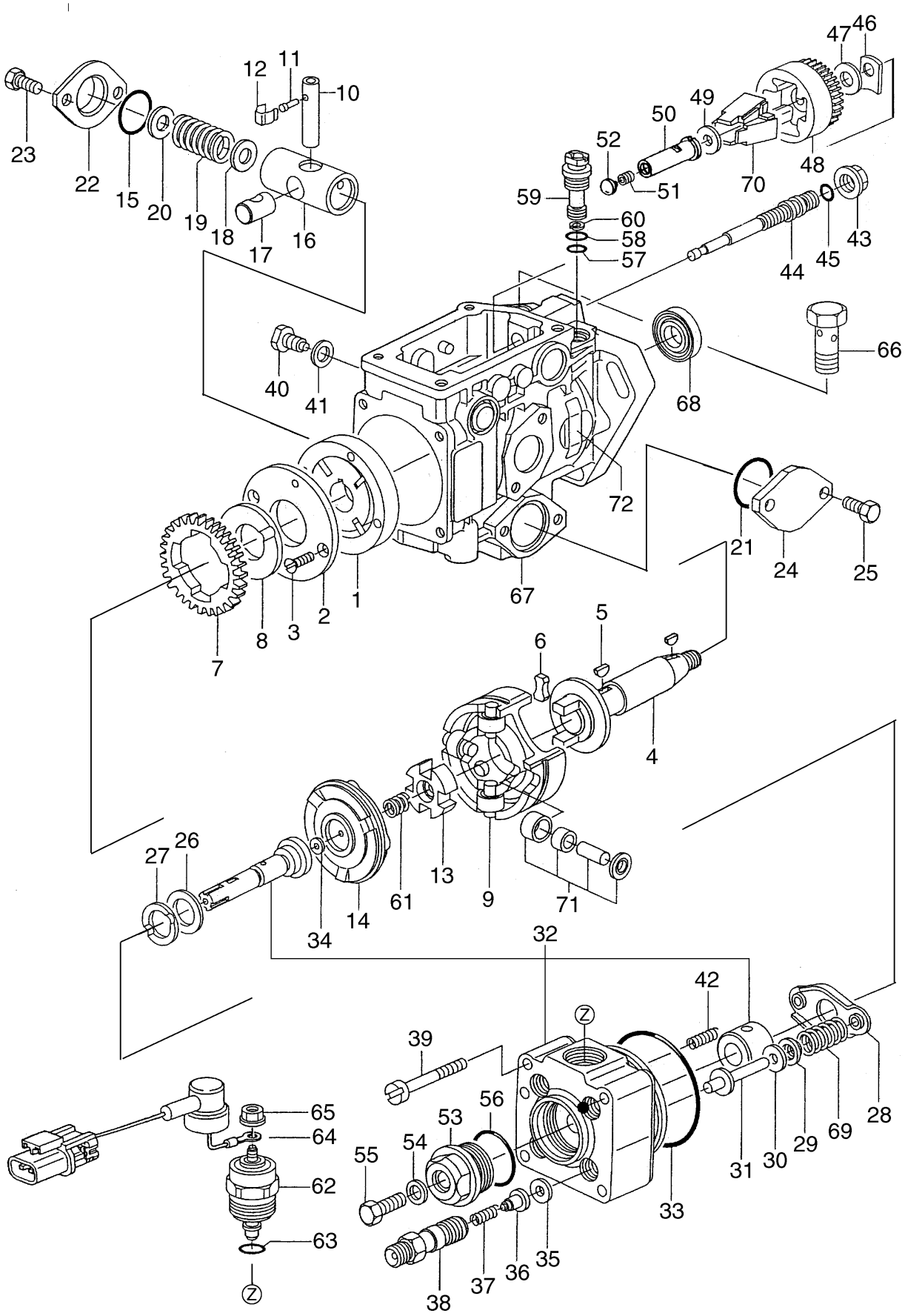

A	2t class	FD20C7, FD20T7, FD20W7, FD25C7, FD25T7, FD25W7,
	3t class	FD30C7, FD30T7, FD30W7,

B	1t class	FHD15C3, FHD15T3, FHD18C3, FHD18T3
	2t class	FD20C3, FD20C13, FD20T3, FD20T13, FD20W3, FD25C3, FD25C13, FD25T3, FD25T13, FD25W3
	3t class	FD30C3, FD30T3, FD30W3

FIG. 29

Item No. 見出番号	Part No. 部品番号	Mark 記号	Description 部品名称		Req'd 個数	Remarks : serial No. 備考：実施号車
A1	A-16700-40K11		INJECTION PUMP ASSY	ｲﾝｼﾞｪｸｼｮﾝﾎﾟﾝﾌﾟ ｱｯｾﾝ	1	INC.1-72 & etc.
K	A-146600-1120		KIT,REPAIR	ﾘﾍﾟｱｷｯﾄ	1	
1	A-146100-0020		PUMP,FEED	ﾎﾟﾝﾌﾟ	1	
2	A-146103-0000		COVER	ｶﾊﾞｰ	1	
3	A-139104-0000		SCREW	ｽｸﾘｭ	2	
A2	A-146200-0020		DRIVE SHAFT ASSY	ﾄﾞﾗｲﾌﾞｼｬﾌﾄｱｯｾﾝ	1	INC.4-7
4	A-146200-0000		SHAFT,DRIVE	ｼｬﾌﾄ	1	
5	A-146201-0000		KEY,WOODRUFF	ｷｰ	1	
6	A-146202-0100		DAMPER	ﾀﾞﾝﾊﾟ	2	
7	A-146203-0000		GEAR	ｷﾞﾔｰ	1	
8	A-146204-0000		WASHER	ﾜｯｼｬ	1	
9	A-146210-1720		ROLLER	ﾛｰﾗ	1	INC.71
10	A-146303-0100		PIN	ﾋﾟﾝ	1	
11	A-146304-0000		PIN	ﾋﾟﾝ	1	
12	A-146305-0000		CLIP	ｸﾘｯﾌﾟ	1	
13	A-146205-0000		DISK	ﾃﾞｨｽｸ	1	
14	A-146220-2120		CAM,DISK	ｶﾑ	1	
15	A-146600-0800		O RING	Oﾘﾝｸﾞ	1	
16	A-146300-0000		PISTON	ﾋﾟｽﾄﾝ	1	
17	A-146301-0000		SLIDER	ｽﾗｲﾀﾞ	1	
18	A-146603-0700		SHIM	ｼﾑ	1	
19	A-146302-3600		SPRING,TIMER	ｽﾌﾟﾘﾝｸﾞ	AR	
-	A-146302-3500		SPRING,TIMER	ｽﾌﾟﾘﾝｸﾞ	AR	
-	A-146302-3700		SPRING,TIMER	ｽﾌﾟﾘﾝｸﾞ	AR	
20	A-146603-0700		SHIM	ｼﾑ	AR	t=0.6
-	A-146603-0800		SHIM	ｼﾑ	AR	t=0.7
-	A-146603-0900		SHIM	ｼﾑ	AR	t=0.9
-	A-146603-1000		SHIM	ｼﾑ	AR	t=1.0
-	A-146603-1100		SHIM	ｼﾑ	AR	t=1.2
-	A-146603-3600		SHIM	ｼﾑ	AR	t=2.4
21	A-146600-0800		O RING	Oﾘﾝｸﾞ	1	
22	A-146310-0700		COVER	ｶﾊﾞｰ	1	
23	A-146620-5000		BOLT	ﾎﾞﾙﾄ	2	
24	A-146310-0100		COVER	ｶﾊﾞｰ	1	
25	A-146620-5000		BOLT	ﾎﾞﾙﾄ	2	
26	A-146230-0000		SHIM	ｼﾑ	1	
27	A-146230-0100		WASHER	ﾜｯｼｬ	1	
28	A-146231-0001		SEAT,SPRING	ｼｰﾄ	1	
29	A-146233-0000		SEAT,SPRING	ｼｰﾄ	2	
30	A-146603-0100		SHIM	ｼﾑ	AR	t=0.8
-	A-146603-0200		SHIM	ｼﾑ	AR	t=1.0
-	A-146603-0300		SHIM	ｼﾑ	AR	t=1.2
-	A-146603-0400		SHIM	ｼﾑ	AR	t=1.5
-	A-146690-1400		SHIM	ｼﾑ	AR	t=0.9
-	A-146690-1500		SHIM	ｼﾑ	AR	t=1.1
-	A-146690-1600		SHIM	ｼﾑ	AR	t=1.3
-	A-146690-1700		SHIM	ｼﾑ	AR	t=1.4
-	A-146690-1800		SHIM	ｼﾑ	AR	t=1.6
31	A-146234-0500		PIN,GUIDE	ﾋﾟﾝ	2	

FIG. 29 FUEL INJECTION PUMP(INNER PARTS)(2/2)(FOR STD)(-732742)
ﾌｭｰｴﾙｲﾝｼﾞｪｸｼｮﾝﾎﾟﾝﾌﾟ(ｲﾝﾅﾊﾟｰﾂ)(STD用)

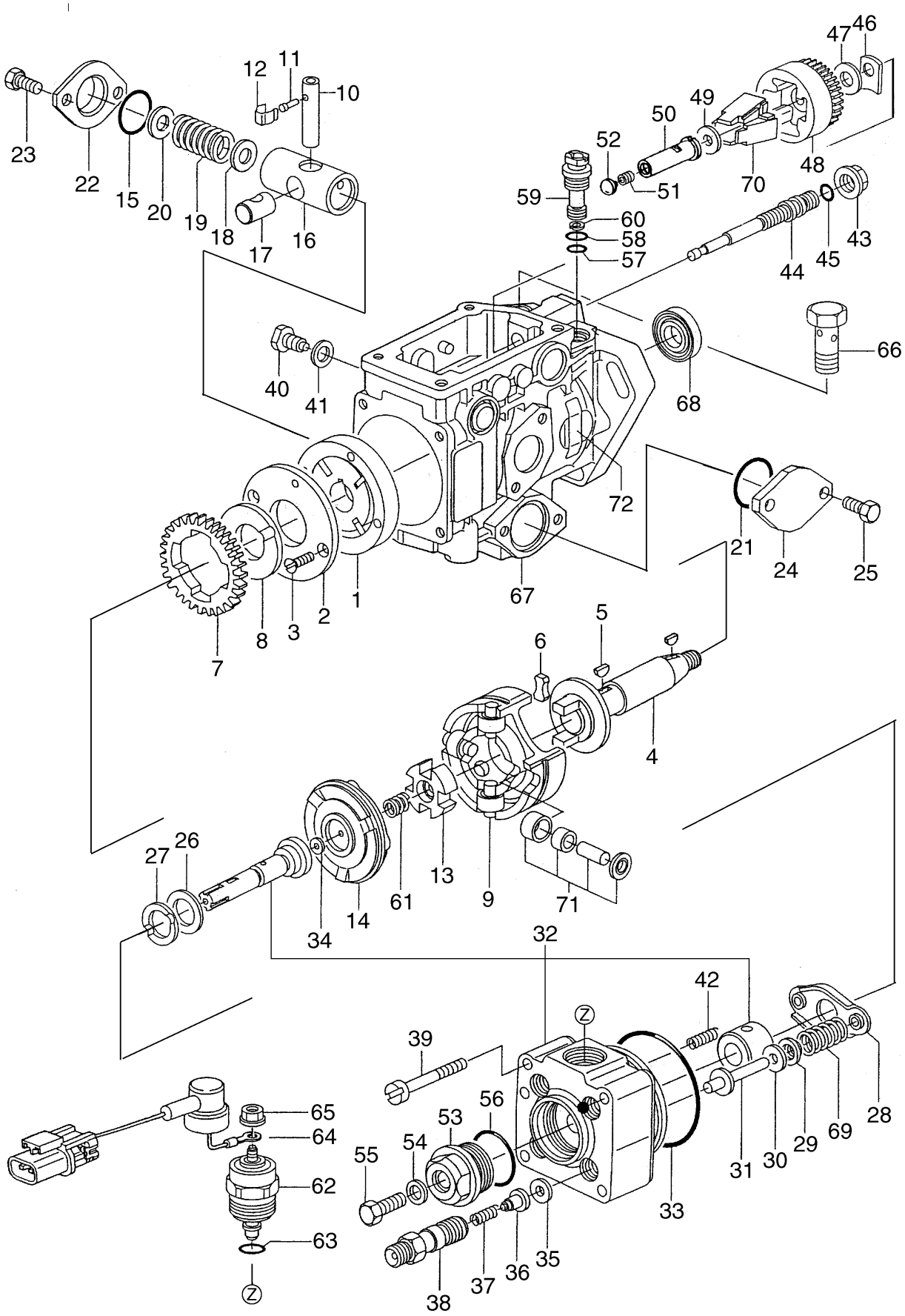

A	2t class	FD20C7, FD20T7, FD20W7, FD25C7, FD25T7, FD25W7,
	3t class	FD30C7, FD30T7, FD30W7,

B	1t class	FHD15C3, FHD15T3, FHD18C3, FHD18T3
	2t class	FD20C3, FD20C13, FD20T3, FD20T13, FD20W3, FD25C3, FD25C13, FD25T3, FD25T13, FD25W3
	3t class	FD30C3, FD30T3, FD30W3

FIG. 29

Item No. 見出番号	Part No. 部品番号	Mark 記号	Description 部品名称		Req'd 個数	Remarks : serial No. 備考：実施号車
32	A-146401-0520		HEAD,DISTRIBUTOR	ﾍｯﾄﾞ	1	
33	A-146600-0000		O RING	Oﾘﾝｸﾞ	1	
34	A-146420-0200		SHIM	ｼﾑ	AR	t=1.94
-	A-146420-0700		SHIM	ｼﾑ	AR	t=2.04
-	A-146420-1200		SHIM	ｼﾑ	AR	t=2.14
-	A-146420-1700		SHIM	ｼﾑ	AR	t=2.24
-	A-146420-2200		SHIM	ｼﾑ	AR	t=2.34
-	A-146420-2700		SHIM	ｼﾑ	AR	t=2.44
-	A-146420-3200		SHIM	ｼﾑ	AR	t=2.54
-	A-146420-3700		SHIM	ｼﾑ	AR	t=2.64
-	A-146420-5600		SHIM	ｼﾑ	AR	t=1.84
35	A-146433-0100		GASKET	ｶﾞｽｹｯﾄ	4	
36	A-146430-0320		VALVE,DELIVERY	ﾊﾞﾙﾌﾞ	4	
37	A-146432-0000		SPRING	ｽﾌﾟﾘﾝｸﾞ	4	
38	A-146440-0220		HOLDER	ﾎﾙﾀﾞ	4	
39	A-139106-0100		SCREW	ｽｸﾘｭ	4	
40	A-146568-0000		BOLT,PIVOT	ﾎﾞﾙﾄ	2	
41	A-026508-1140		GASKET	ｶﾞｽｹｯﾄ	2	
42	A-146588-0500		SPRING	ｽﾌﾟﾘﾝｸﾞ	2	
43	A-146569-0300		NUT	ﾅｯﾄ	1	
44	A-146570-0100		SHAFT,GOVERNOR	ｼｬﾌﾄ	1	
45	A-146600-0400		O RING	Oﾘﾝｸﾞ	1	
46	A-146571-0000		SHIM	ｼﾑ	AR	t=1.05
-	A-146571-0100		SHIM	ｼﾑ	AR	t=1.25
-	A-146571-0200		SHIM	ｼﾑ	AR	t=1.45
-	A-146571-0300		SHIM	ｼﾑ	AR	t=1.65
-	A-146571-0400		SHIM	ｼﾑ	AR	t=1.85
47	A-146602-0600		WASHER	ﾜｯｼｬ	1	
48	A-146572-0020		HOLDER	ﾎﾙﾀﾞ	1	
49	A-146602-2600		WASHER	ﾜｯｼｬ	1	
50	A-146975-4200		SLEEVE	ｽﾘｰﾌﾞ	1	
51	A-146576-0200		CAP	ｷｬｯﾌﾟ	1	
52	A-146577-1900		PLUG,CLOSING	ﾌﾟﾗｸﾞ	AR	L=2.3
-	A-146577-2000		PLUG,CLOSING	ﾌﾟﾗｸﾞ	AR	L=2.5
-	A-146577-2100		PLUG,CLOSING	ﾌﾟﾗｸﾞ	AR	L=2.7
-	A-146577-2200		PLUG,CLOSING	ﾌﾟﾗｸﾞ	AR	L=2.9
-	A-146577-2300		PLUG,CLOSING	ﾌﾟﾗｸﾞ	AR	L=3.1
-	A-146577-2400		PLUG,CLOSING	ﾌﾟﾗｸﾞ	AR	L=3.3
-	A-146577-2500		PLUG,CLOSING	ﾌﾟﾗｸﾞ	AR	L=3.5
-	A-146577-2600		PLUG,CLOSING	ﾌﾟﾗｸﾞ	AR	L=3.7
-	A-146577-2700		PLUG,CLOSING	ﾌﾟﾗｸﾞ	AR	L=3.9
-	A-146577-6800		PLUG,CLOSING	ﾌﾟﾗｸﾞ	AR	L=2.4
-	A-146577-6900		PLUG,CLOSING	ﾌﾟﾗｸﾞ	AR	L=2.6
-	A-146577-7000		PLUG,CLOSING	ﾌﾟﾗｸﾞ	AR	L=2.8
-	A-146577-7100		PLUG,CLOSING	ﾌﾟﾗｸﾞ	AR	L=3.0
-	A-146577-7200		PLUG,CLOSING	ﾌﾟﾗｸﾞ	AR	L=3.2
-	A-146577-7300		PLUG,CLOSING	ﾌﾟﾗｸﾞ	AR	L=3.4
-	A-146577-7400		PLUG,CLOSING	ﾌﾟﾗｸﾞ	AR	L=3.6
-	A-146577-7500		PLUG,CLOSING	ﾌﾟﾗｸﾞ	AR	L=3.8
53	A-146421-0020		PLUG	ﾌﾟﾗｸﾞ	1	INC.54-56

FIG. 29 FUEL INJECTION PUMP(INNER PARTS)(2/2)(FOR STD)(-732742)
ﾌｭｰｴﾙｲﾝｼﾞｪｸｼｮﾝﾎﾟﾝﾌﾟ(ｲﾝﾅﾊﾟｰﾂ)(STD用)

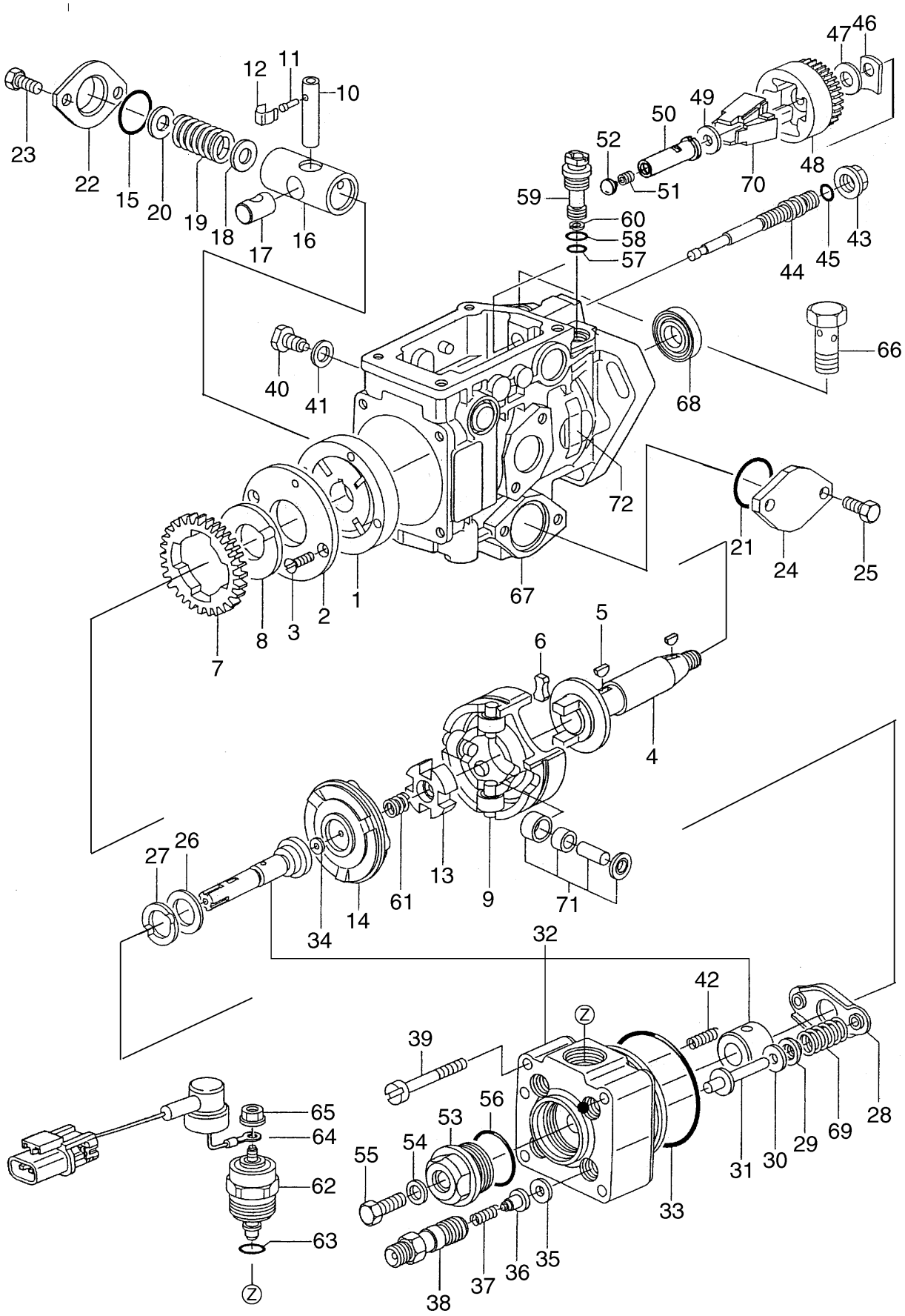

A	2t class	FD20C7, FD20T7, FD20W7, FD25C7, FD25T7, FD25W7,
	3t class	FD30C7, FD30T7, FD30W7,

B	1t class	FHD15C3, FHD15T3, FHD18C3, FHD18T3
	2t class	FD20C3, FD20C13, FD20T3, FD20T13, FD20W3, FD25C3, FD25C13, FD25T3, FD25T13, FD25W3
	3t class	FD30C3, FD30T3, FD30W3

FIG. 29

Item No. 見出番号	Part No. 部品番号	Mark 記号	Description 部品名称		Req'd 個数	Remarks : serial No. 備考：実施号車
54	A-026508-1140		GASKET	ｶﾞｽｹｯﾄ	1	
55	A-146422-0000		BOLT	ﾎﾞﾙﾄ	1	
56	A-146600-0500		O RING	Oﾘﾝｸﾞ	1	
57	A-146600-0600		O RING	Oﾘﾝｸﾞ	1	
58	A-146600-0700		O RING	Oﾘﾝｸﾞ	1	
59	A-146110-0220		VALVE,REGULATING	ﾊﾞﾙﾌﾞ	1	INC.60
60	A-146114-0000		RING,SPRING	ﾘﾝｸﾞ	1	
61	A-146206-0100		SPRING	ｽﾌﾟﾘﾝｸﾞ	1	
62	A-146650-0720		VALVE,MAGNET	ﾊﾞﾙﾌﾞ	1	INC.63
63	A-146600-1700		O RING	Oﾘﾝｸﾞ	1	
64	A-146662-8320		WIRE	ﾜｲﾔ	1	
65	A-146621-4901		NUT	ﾅｯﾄ	1	
66	A-027412-2440		BOLT,EYE	ﾎﾞﾙﾄ	1	
67	A-146009-9220		HOUSING,PUMP	ﾊｳｼﾞﾝｸﾞ	1	INC.68
68	A-146601-0900		SEAL,OIL	ｼｰﾙ	1	
69	A-146232-0320		SPRING	ｽﾌﾟﾘﾝｸﾞ	1	
70	A-146574-0320		FLYWEIGHT	ﾌﾗｲｳｴｲﾄ	1	
71	A-146210-5720		ROLLER	ﾛｰﾗ	1	
72	A-146983-7200		PLATE,NUMBER	ﾌﾟﾚｰﾄ	1	

FIG. 29A FUEL INJECTION PUMP(INNER PARTS)(2/2)(FOR STD & OC)(732743-)
フューエルインジェクションポンプ(インナパーツ)(STD&OC用)

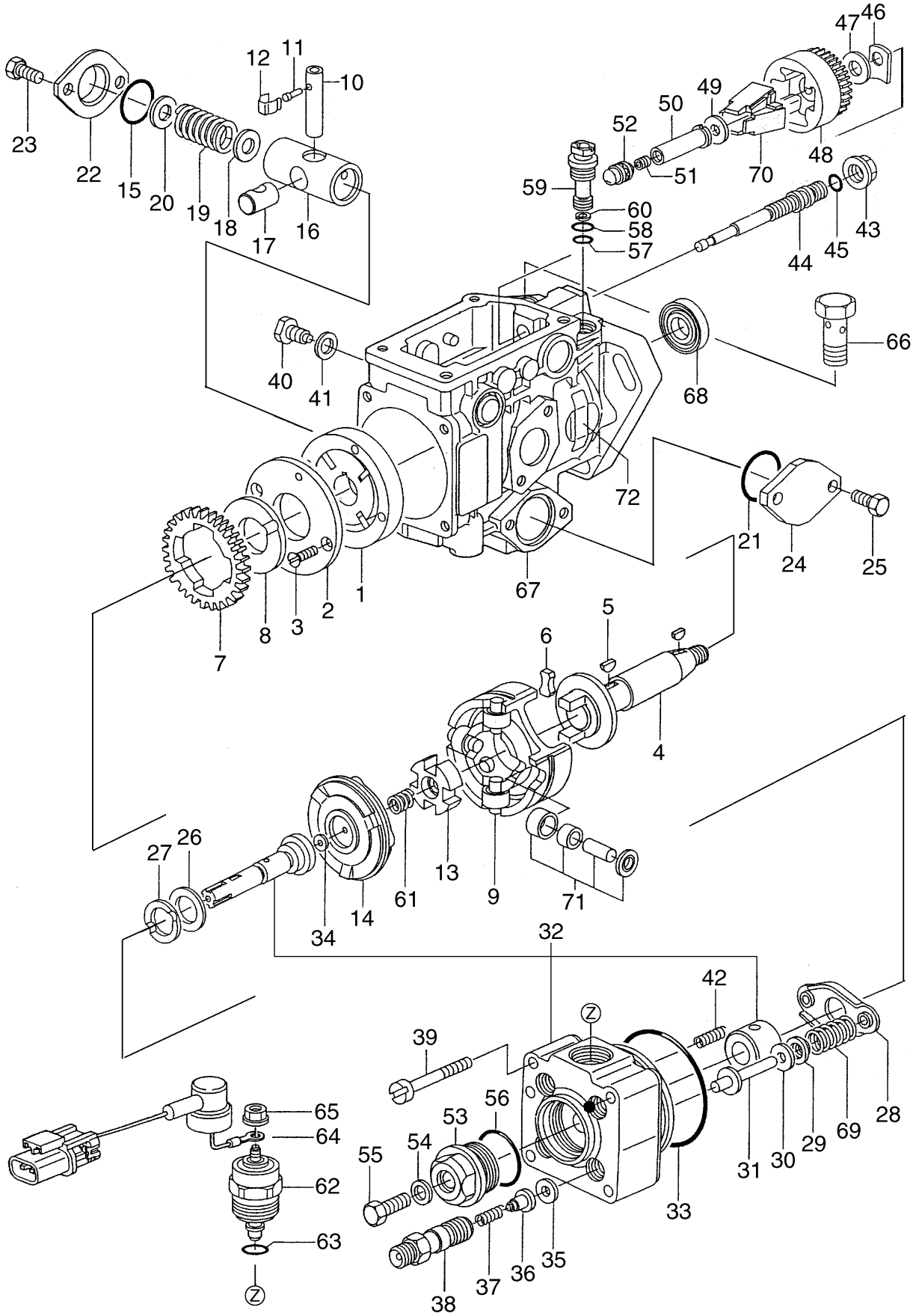

A	2t class	FD20C7, FD20T7, FD20W7, FD25C7, FD25T7, FD25W7,
	3t class	FD30C7, FD30T7, FD30W7,

B	1t class	FHD15C3, FHD15T3, FHD18C3, FHD18T3
	2t class	FD20C3, FD20C13, FD20T3, FD20T13, FD20W3, FD25C3, FD25C13, FD25T3, FD25T13, FD25W3
	3t class	FD30C3, FD30T3, FD30W3

FIG. 29A

Item No. 見出番号	Part No. 部品番号	Mark 記号	Description 部品名称		Req'd 個数	Remarks : serial No. 備考：実施号車
A1	A-16700-NA002		INJECTION PUMP ASSY	ｲﾝｼﾞｪｸｼｮﾝﾎﾟﾝﾌﾟ ｱｯｾﾝ	1	INC.1-72 & etc.
K	A-146600-1120		KIT,REPAIR	ﾘﾍﾟｱｷｯﾄ	1	
1	A-146100-0020		PUMP,FEED	ﾎﾟﾝﾌﾟ	1	
2	A-146103-0000		COVER	ｶﾊﾞｰ	1	
3	A-139104-0000		SCREW	ｽｸﾘｭ	2	
A2	A-146200-0020		DRIVE SHAFT ASSY	ﾄﾞﾗｲﾌﾞｼｬﾌﾄｱｯｾﾝ	1	INC.4-7
4	A-146200-0000		SHAFT,DRIVE	ｼｬﾌﾄ	1	
5	A-146201-0000		KEY,WOODRUFF	ｷｰ	1	
6	A-146202-0100		DAMPER	ﾀﾞﾝﾊﾟ	2	
7	A-146203-0000		GEAR	ｷﾞﾔｰ	1	
8	A-146204-0000		WASHER	ﾜｯｼｬ	1	
9	A-146210-1720		ROLLER	ﾛｰﾗ	1	INC.71
10	A-146303-0100		PIN	ﾋﾟﾝ	1	
11	A-146304-0000		PIN	ﾋﾟﾝ	1	
12	A-146305-0000		CLIP	ｸﾘｯﾌﾟ	1	
13	A-146205-0000		DISK	ﾃﾞｨｽｸ	1	
14	A-146220-2120		CAM,DISK	ｶﾑ	1	
15	A-146600-0800		O RING	Oﾘﾝｸﾞ	1	
16	A-146300-0000		PISTON	ﾋﾟｽﾄﾝ	1	
17	A-146301-0000		SLIDER	ｽﾗｲﾀﾞ	1	
18	A-146603-0700		SHIM	ｼﾑ	1	
19	A-146302-3600		SPRING,TIMER	ｽﾌﾟﾘﾝｸﾞ	AR	
-	A-146302-3500		SPRING,TIMER	ｽﾌﾟﾘﾝｸﾞ	AR	
-	A-146302-3700		SPRING,TIMER	ｽﾌﾟﾘﾝｸﾞ	AR	
20	A-146603-0700		SHIM	ｼﾑ	AR	t=0.6
-	A-146603-0800		SHIM	ｼﾑ	AR	t=0.7
-	A-146603-0900		SHIM	ｼﾑ	AR	t=0.9
-	A-146603-1000		SHIM	ｼﾑ	AR	t=1.0
-	A-146603-1100		SHIM	ｼﾑ	AR	t=1.2
-	A-146603-3600		SHIM	ｼﾑ	AR	t=2.4
21	A-146600-0800		O RING	Oﾘﾝｸﾞ	1	
22	A-146310-0700		COVER	ｶﾊﾞｰ	1	
23	A-146620-5000		BOLT	ﾎﾞﾙﾄ	2	
24	A-146310-0100		COVER	ｶﾊﾞｰ	1	
25	A-146620-5000		BOLT	ﾎﾞﾙﾄ	2	
26	A-146230-0000		SHIM	ｼﾑ	1	
27	A-146230-0100		WASHER	ﾜｯｼｬ	1	
28	A-146231-0001		SEAT,SPRING	ｼｰﾄ	1	
29	A-146233-0000		SEAT,SPRING	ｼｰﾄ	2	
30	A-146603-0100		SHIM	ｼﾑ	AR	t=0.8
-	A-146603-0200		SHIM	ｼﾑ	AR	t=1.0
-	A-146603-0300		SHIM	ｼﾑ	AR	t=1.2
-	A-146603-0400		SHIM	ｼﾑ	AR	t=1.5
-	A-146690-1400		SHIM	ｼﾑ	AR	t=0.9
-	A-146690-1500		SHIM	ｼﾑ	AR	t=1.1
-	A-146690-1600		SHIM	ｼﾑ	AR	t=1.3
-	A-146690-1700		SHIM	ｼﾑ	AR	t=1.4
-	A-146690-1800		SHIM	ｼﾑ	AR	t=1.6
31	A-146234-0500		PIN,GUIDE	ﾋﾟﾝ	2	

FIG. 29A FUEL INJECTION PUMP(INNER PARTS)(2/2)(FOR STD & OC)(732743-)
フューエルインジェクションポンプ(インナパーツ)(STD&OC用)

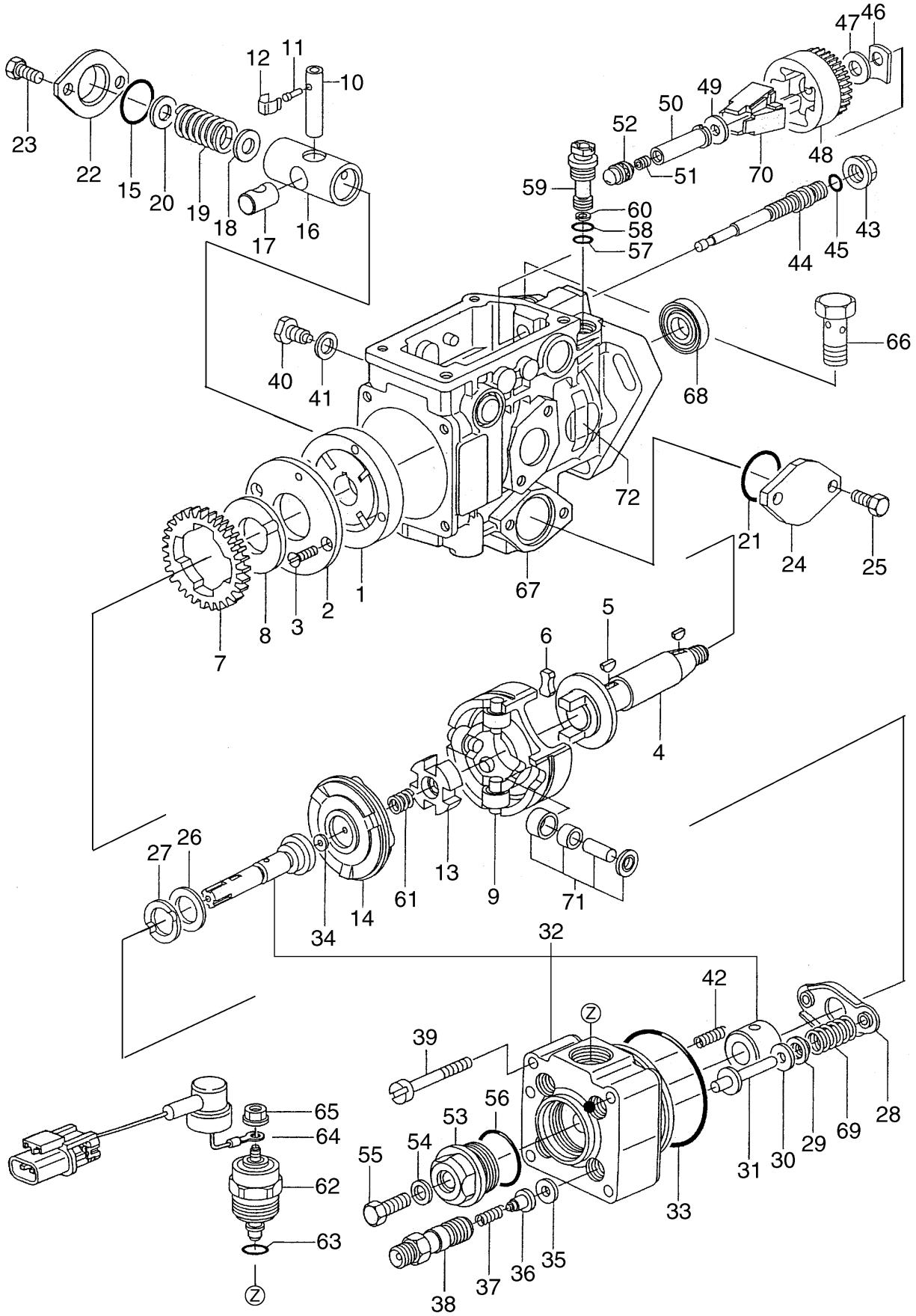

A	2t class	FD20C7, FD20T7, FD20W7, FD25C7, FD25T7, FD25W7,
	3t class	FD30C7, FD30T7, FD30W7,

B	1t class	FHD15C3, FHD15T3, FHD18C3, FHD18T3
	2t class	FD20C3, FD20C13, FD20T3, FD20T13, FD20W3, FD25C3, FD25C13, FD25T3, FD25T13, FD25W3
	3t class	FD30C3, FD30T3, FD30W3

FIG. 29A

Item No. 見出番号	Part No. 部品番号	Mark 記号	Description 部品名称		Req'd 個数	Remarks : serial No. 備考：実施号車
32	A-146401-0520		HEAD,DISTRIBUTOR	ﾍｯﾄﾞ	1	
33	A-146600-0000		O RING	Oﾘﾝｸﾞ	1	
34	A-146420-0200		SHIM	ｼﾑ	AR	t=1.94
-	A-146420-0700		SHIM	ｼﾑ	AR	t=2.04
-	A-146420-1200		SHIM	ｼﾑ	AR	t=2.14
-	A-146420-1700		SHIM	ｼﾑ	AR	t=2.24
-	A-146420-2200		SHIM	ｼﾑ	AR	t=2.34
-	A-146420-2700		SHIM	ｼﾑ	AR	t=2.44
-	A-146420-3200		SHIM	ｼﾑ	AR	t=2.54
-	A-146420-3700		SHIM	ｼﾑ	AR	t=2.64
-	A-146420-5600		SHIM	ｼﾑ	AR	t=1.84
35	A-146433-0100		GASKET	ｶﾞｽｹｯﾄ	4	
36	A-146430-0320		VALVE,DELIVERY	ﾊﾞﾙﾌﾞ	4	
37	A-146432-0000		SPRING	ｽﾌﾟﾘﾝｸﾞ	4	
38	A-146440-0220		HOLDER	ﾎﾙﾀﾞ	4	
39	A-139106-0100		SCREW	ｽｸﾘｭ	4	
40	A-146568-0000		BOLT,PIVOT	ﾎﾞﾙﾄ	2	
41	A-026508-1140		GASKET	ｶﾞｽｹｯﾄ	2	
42	A-146588-0500		SPRING	ｽﾌﾟﾘﾝｸﾞ	2	
43	A-146569-0300		NUT	ﾅｯﾄ	1	
44	A-146570-0100		SHAFT,GOVERNOR	ｼｬﾌﾄ	1	
45	A-146600-0400		O RING	Oﾘﾝｸﾞ	1	
46	A-146571-0000		SHIM	ｼﾑ	AR	t=1.05
-	A-146571-0100		SHIM	ｼﾑ	AR	t=1.25
-	A-146571-0200		SHIM	ｼﾑ	AR	t=1.45
-	A-146571-0300		SHIM	ｼﾑ	AR	t=1.65
-	A-146571-0400		SHIM	ｼﾑ	AR	t=1.85
47	A-146602-0600		WASHER	ﾜｯｼｬ	1	
48	A-146572-0020		HOLDER	ﾎﾙﾀﾞ	1	
49	A-146602-2600		WASHER	ﾜｯｼｬ	1	
50	A-146976-0700		SLEEVE	ｽﾘｰﾌﾞ	1	
51	A-146576-0400		CAP	ｷｬｯﾌﾟ	1	
52	A-146877-1020		PLUG,CLOSING	ﾌﾟﾗｸﾞ	AR	L=5.2
-	A-146877-1120		PLUG,CLOSING	ﾌﾟﾗｸﾞ	AR	L=5.3
-	A-146877-1220		PLUG,CLOSING	ﾌﾟﾗｸﾞ	AR	L=5.4
-	A-146877-1320		PLUG,CLOSING	ﾌﾟﾗｸﾞ	AR	L=5.5
-	A-146877-1420		PLUG,CLOSING	ﾌﾟﾗｸﾞ	AR	L=5.6
-	A-146877-1520		PLUG,CLOSING	ﾌﾟﾗｸﾞ	AR	L=5.7
-	A-146877-1620		PLUG,CLOSING	ﾌﾟﾗｸﾞ	AR	L=5.8
-	A-146877-1720		PLUG,CLOSING	ﾌﾟﾗｸﾞ	AR	L=5.9
-	A-146877-1820		PLUG,CLOSING	ﾌﾟﾗｸﾞ	AR	L=6.0
-	A-146877-1920		PLUG,CLOSING	ﾌﾟﾗｸﾞ	AR	L=6.1
-	A-146877-2020		PLUG,CLOSING	ﾌﾟﾗｸﾞ	AR	L=6.2
-	A-146877-2120		PLUG,CLOSING	ﾌﾟﾗｸﾞ	AR	L=6.3
-	A-146877-2220		PLUG,CLOSING	ﾌﾟﾗｸﾞ	AR	L=6.4
-	A-146877-2320		PLUG,CLOSING	ﾌﾟﾗｸﾞ	AR	L=6.5
-	A-146877-2420		PLUG,CLOSING	ﾌﾟﾗｸﾞ	AR	L=6.6
-	A-146877-2520		PLUG,CLOSING	ﾌﾟﾗｸﾞ	AR	L=6.7
-	A-146877-2620		PLUG,CLOSING	ﾌﾟﾗｸﾞ	AR	L=6.8
53	A-146421-0020		PLUG	ﾌﾟﾗｸﾞ	1	INC.54-56

FIG. 29A FUEL INJECTION PUMP(INNER PARTS)(2/2)(FOR STD & OC)(732743-)
フューエルインジェクションポンプ(インナパーツ)(STD&OC用)

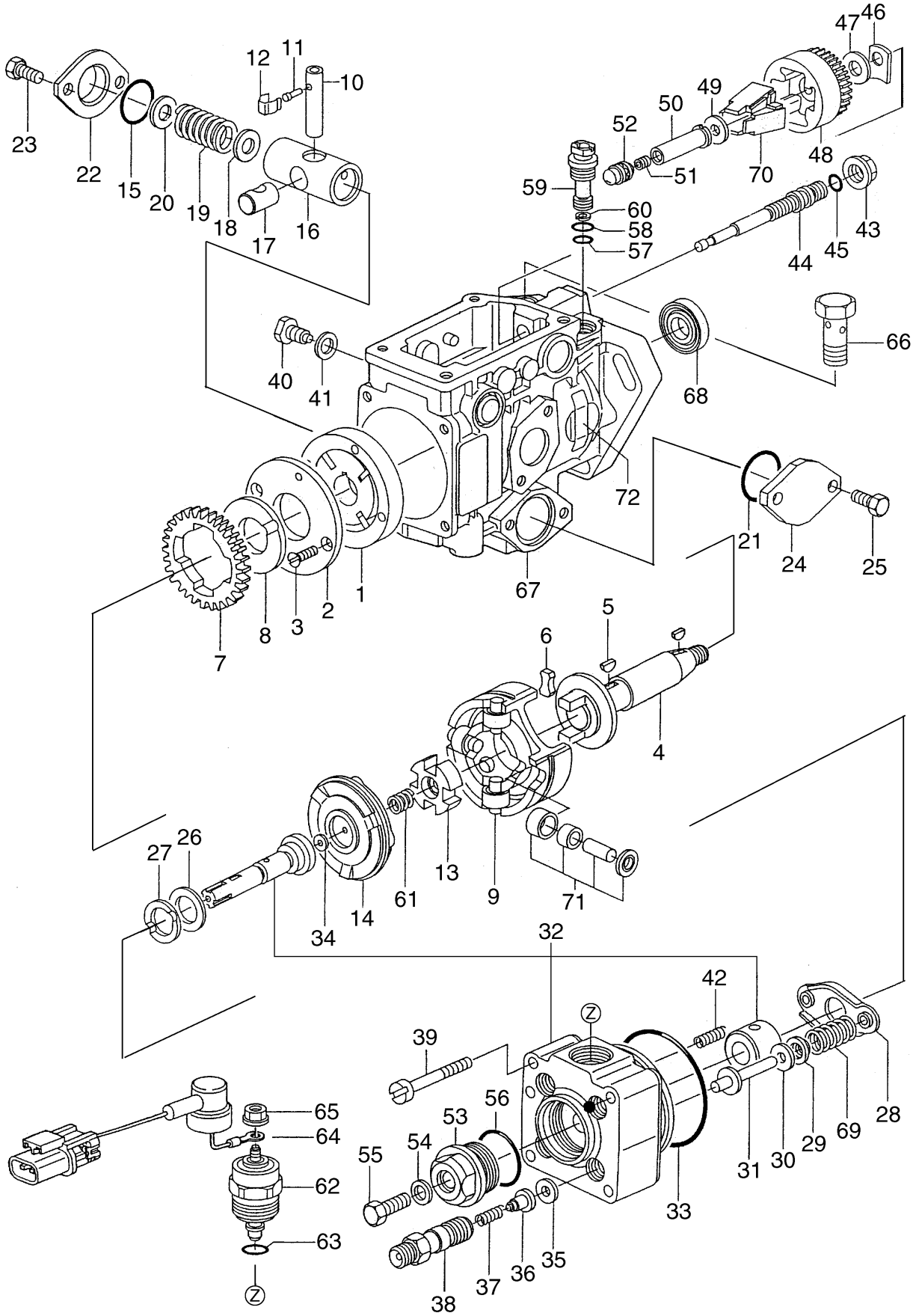

A		
	2t class	FD20C7, FD20T7, FD20W7, FD25C7, FD25T7, FD25W7,
	3t class	FD30C7, FD30T7, FD30W7,

B		
	1t class	FHD15C3, FHD15T3, FHD18C3, FHD18T3
	2t class	FD20C3, FD20C13, FD20T3, FD20T13, FD20W3, FD25C3, FD25C13, FD25T3, FD25T13, FD25W3
	3t class	FD30C3, FD30T3, FD30W3

FIG. 29A

Item No. 見出番号	Part No. 部品番号	Mark 記号	Description 部品名称		Req'd 個数	Remarks : serial No. 備考：実施号車
54	A-026508-1140		GASKET	ｶﾞｽｹｯﾄ	1	
55	A-146422-0000		BOLT	ﾎﾞﾙﾄ	1	
56	A-146600-0500		O RING	Oﾘﾝｸﾞ	1	
57	A-146600-0600		O RING	Oﾘﾝｸﾞ	1	
58	A-146600-0700		O RING	Oﾘﾝｸﾞ	1	
59	A-146110-0220		VALVE,REGULATING	ﾊﾞﾙﾌﾞ	1	INC.60
60	A-146114-0000		RING,SPRING	ﾘﾝｸﾞ	1	
61	A-146206-0100		SPRING	ｽﾌﾟﾘﾝｸﾞ	1	
62	A-146650-0720		VALVE,MAGNET	ﾊﾞﾙﾌﾞ	1	INC.63
63	A-146600-1700		O RING	Oﾘﾝｸﾞ	1	
64	A-146662-8320		WIRE	ﾜｲﾔ	1	
65	A-146621-4901		NUT	ﾅｯﾄ	1	
66	A-027412-2440		BOLT,EYE	ﾎﾞﾙﾄ	1	
67	A-146009-9220		HOUSING,PUMP	ﾊｳｼﾞﾝｸﾞ	1	INC.68
68	A-146601-0900		SEAL,OIL	ｼｰﾙ	1	
69	A-146232-0320		SPRING	ｽﾌﾟﾘﾝｸﾞ	1	
70	A-146574-0320		FLYWEIGHT	ﾌﾗｲｳｴｲﾄ	1	
71	A-146210-5720		ROLLER	ﾛｰﾗ	1	
72	A-146983-7200		PLATE,NUMBER	ﾌﾟﾚｰﾄ	1	

FIG. 30 FUEL FILTER(FITTING PARTS)
ﾌｭｰｴﾙﾌｨﾙﾀ(ﾌｨｯﾃｨﾝｸﾞﾊﾟｰﾂ)

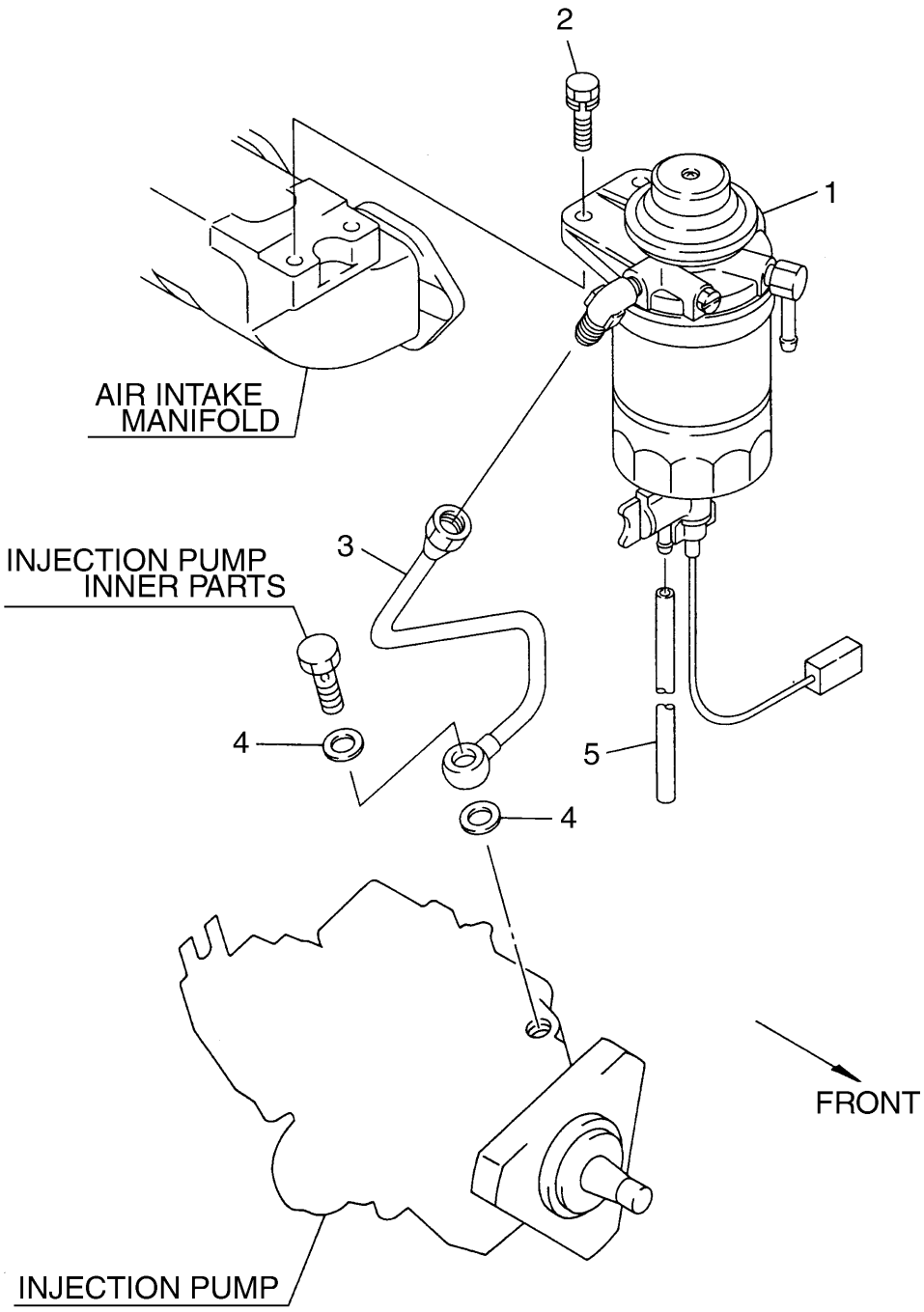

A	2t class	FD20C7, FD20T7, FD20W7, FD25C7, FD25T7, FD25W7,
	3t class	FD30C7, FD30T7, FD30W7,

B	1t class	FHD15C3, FHD15T3, FHD18C3, FHD18T3
	2t class	FD20C3, FD20C13, FD20T3, FD20T13, FD20W3, FD25C3, FD25C13, FD25T3, FD25T13, FD25W3
	3t class	FD30C3, FD30T3, FD30W3

FIG. 30

Item No. 見出番号	Part No. 部品番号	Mark 記号	Description 部品名称		Req'd 個数	Remarks : serial No. 備考：実施号車
1	A-16400-41K00		FUEL FILTER	ﾌｭｰｴﾙﾌｨﾙﾀ	1	SEE FIG.31
2	A-08120-8251E		BOLT&WASHER	ﾎﾞﾙﾄ&ﾜｯｼｬ	2	
3	A-17521-41K00		TUBE	ﾁｭｰﾌﾞ	1	
4	A-16794-10G00		GASKET	ｶﾞｽｹｯﾄ	2	
5	A-02173-02820		HOSE,DRAIN	ﾎｰｽ	1	

FIG. 31 FUEL FILTER(INNER PARTS)
フューエルフィルタ(インナパーツ)

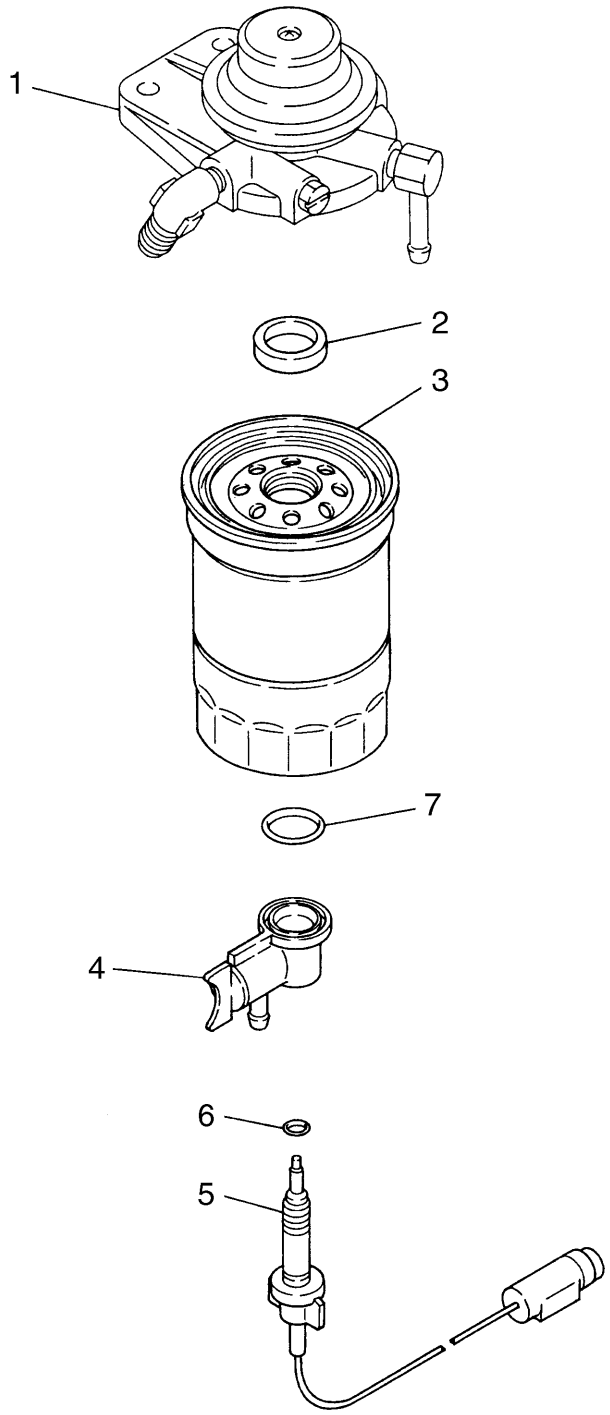

A	2t class	FD20C7, FD20T7, FD20W7, FD25C7, FD25T7, FD25W7,
	3t class	FD30C7, FD30T7, FD30W7,

B	1t class	FHD15C3, FHD15T3, FHD18C3, FHD18T3
	2t class	FD20C3, FD20C13, FD20T3, FD20T13, FD20W3, FD25C3, FD25C13, FD25T3, FD25T13, FD25W3
	3t class	FD30C3, FD30T3, FD30W3

FIG. 31

Item No. 見出番号	Part No. 部品番号	Mark 記号	Description 部品名称		Req'd 個数	Remarks : serial No. 備考：実施号車
A1	A-16400-41K00		FUEL FILTER ASSY	ﾌｭｰｴﾙﾌｨﾙﾀｱｯｾﾝ	1	INC.1-7
1	A-16401-41K00		COVER	ｶﾊﾞｰ	1	INC.2
2	A-16407-W4900		PACKING	ﾊﾟｯｷﾝｸﾞ	1	
A2	A-16410-10H00		CARTRIDGE ASSY	ｶｰﾄﾘｯｼﾞｱｯｾﾝ	1	INC.3-7
3	A-16405-T9005		CARTRIDGE	ｶｰﾄﾘｯｼﾞ	1	
4	A-16413-10H00		SENSOR	ｾﾝｻ	1	INC.5-7
5	A-16412-10H00		SENSOR	ｾﾝｻ	1	
6	A-16407-T9001		O RING	Oﾘﾝｸﾞ	1	
7	A-16406-T9001		O RING	Oﾘﾝｸﾞ	1	

FIG. 32 STARTER(FITTING PARTS) (A)
ｽﾀｰﾀ(ﾌｨｯﾃｨﾝｸﾞﾊﾟｰﾂ)

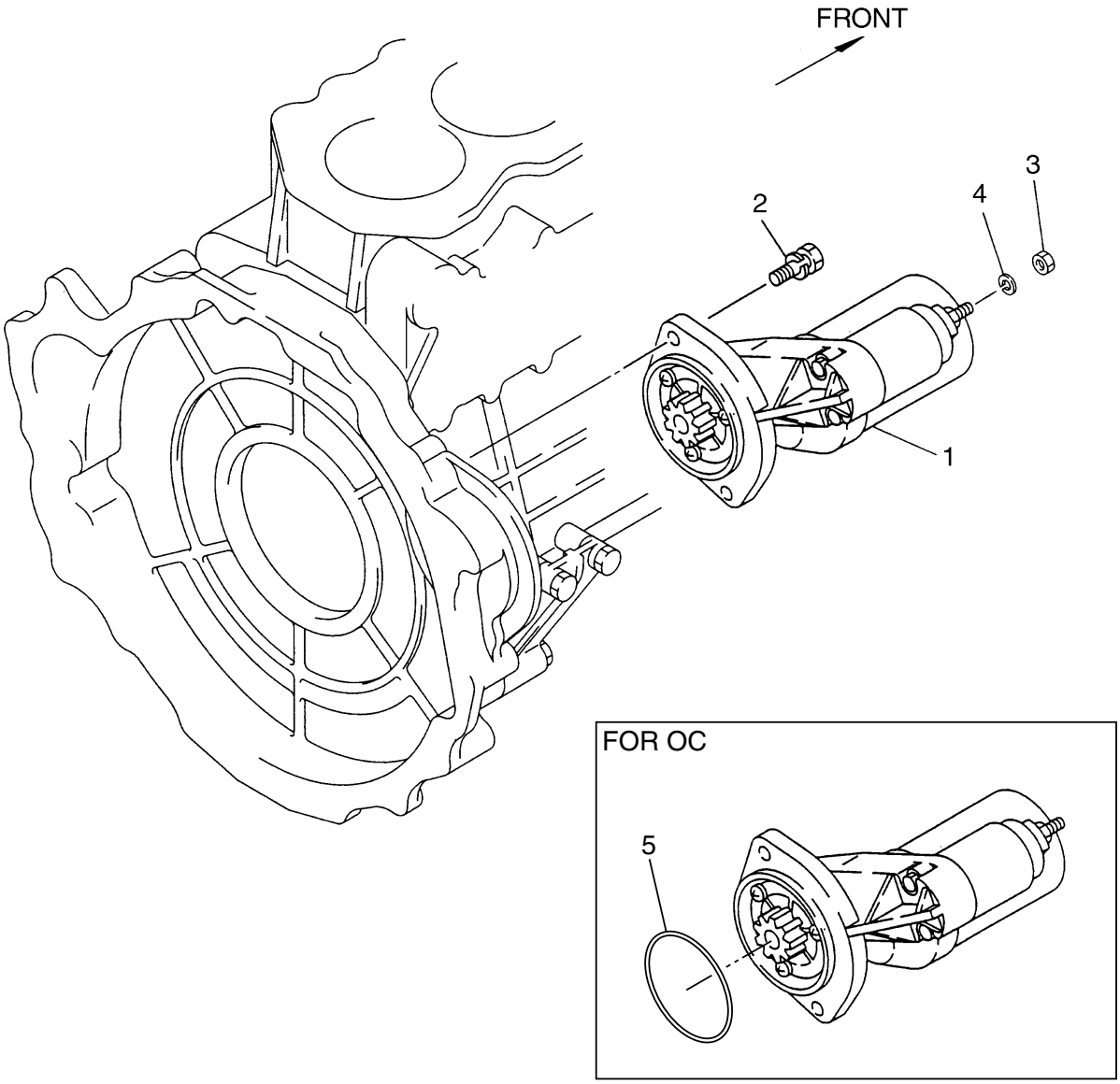

A	2t class	FD20C7, FD20T7, FD20W7, FD25C7, FD25T7, FD25W7,
	3t class	FD30C7, FD30T7, FD30W7,

B	1t class	FHD15C3, FHD15T3, FHD18C3, FHD18T3
	2t class	FD20C3, FD20C13, FD20T3, FD20T13, FD20W3, FD25C3, FD25C13, FD25T3, FD25T13, FD25W3
	3t class	FD30C3, FD30T3, FD30W3

FIG. 32

Item No. 見出番号	Part No. 部品番号	Mark 記号	Description 部品名称		Req'd 個数	Remarks : serial No. 備考：実施号車
1	A-23300-6K200		STARTER	ｽﾀｰﾀ	1	A STD,HCS,UL-DS SEE FIG.34
-	A-23300-40K21		STARTER	ｽﾀｰﾀ	1	A OC 12V
-	A-23300-10T03		STARTER	ｽﾀｰﾀ	1	A 24V(GE) 24V
2	A-08121-0301E		BOLT&WASHER	ﾎﾞﾙﾄ&ﾜｯｼｬ	2	A
3	A-08911-3081A		NUT	ﾅｯﾄ	1	A
4	A-08915-1381A		WASHER	ﾜｯｼｬ	1	A
5	A-23308-40K20		O RING	Oﾘﾝｸﾞ	1	A OC

FIG. 33 STARTER(FITTING PARTS) (B)
ｽﾀｰﾀ(ﾌｨｯﾃｨﾝｸﾞﾊﾟｰﾂ)

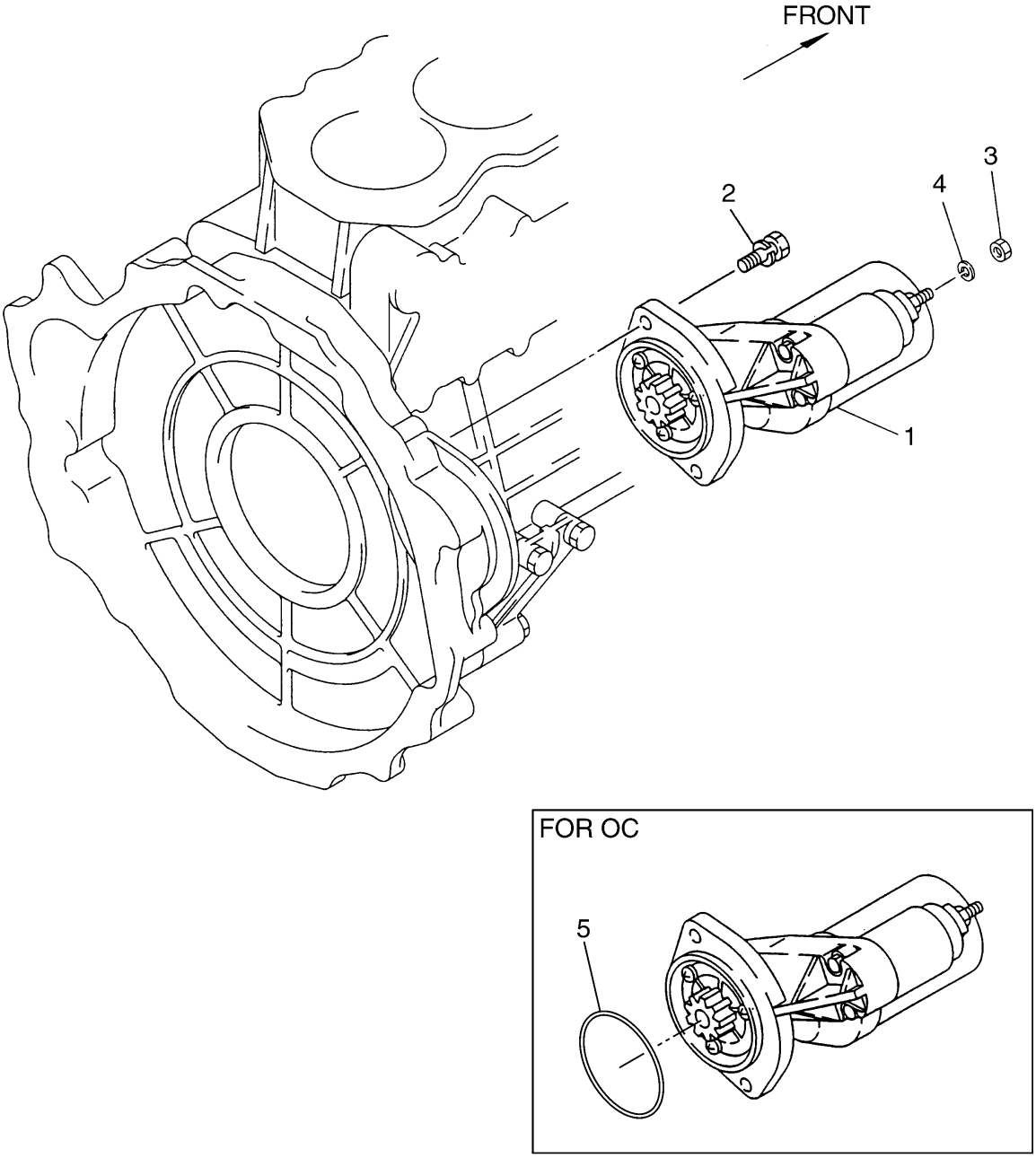

A	2t class	FD20C7, FD20T7, FD20W7, FD25C7, FD25T7, FD25W7,
	3t class	FD30C7, FD30T7, FD30W7,

B	1t class	FHD15C3, FHD15T3, FHD18C3, FHD18T3
	2t class	FD20C3, FD20C13, FD20T3, FD20T13, FD20W3, FD25C3, FD25C13, FD25T3, FD25T13, FD25W3
	3t class	FD30C3, FD30T3, FD30W3

FIG. 33

Item No. 見出番号	Part No. 部品番号	Mark 記号	Description 部品名称		Req'd 個数	Remarks : serial No. 備考：実施号車
1	A-23300-6K200		STARTER	ｽﾀｰﾀ	1	B STD SEE FIG.35
-	A-23300-40K21		STARTER	ｽﾀｰﾀ	1	B OC 12V
2	A-08121-0301E		BOLT&WASHER	ﾎﾞﾙﾄ&ﾜｯｼｬ	2	B
3	A-08911-3081A		NUT	ﾅｯﾄ	1	B
4	A-08915-1381A		WASHER	ﾜｯｼｬ	1	B
5	A-23308-40K20		O RING	Oﾘﾝｸﾞ	1	B OC

FIG. 34 STARTER(INNER PARTS)(FOR STD & HCS & UL-DS) (A)
ｽﾀｰﾀ(ｲﾝﾅﾊﾟｰﾂ)(STD&HCS&UL-DS用)

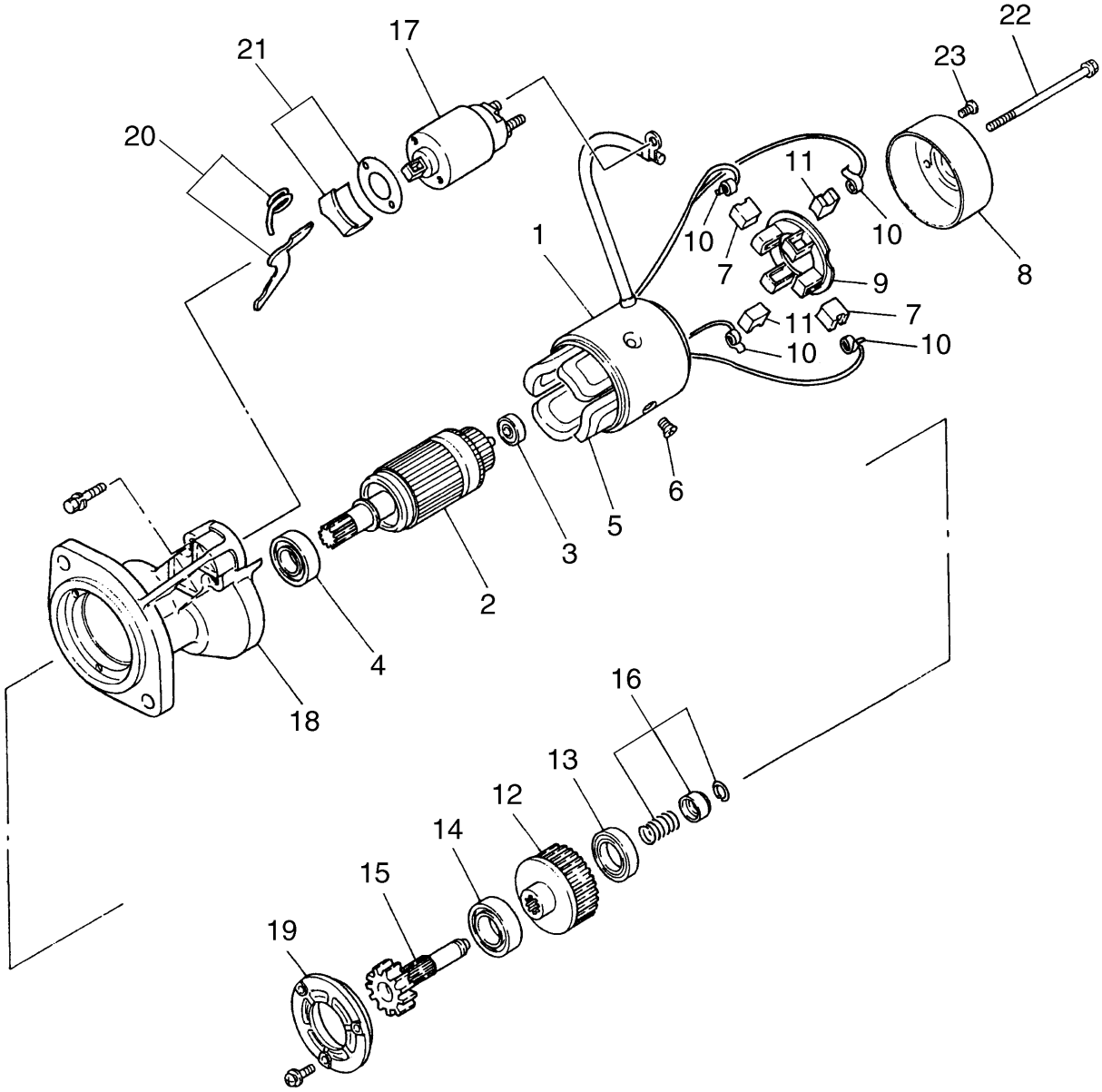

A	2t class	FD20C7, FD20T7, FD20W7, FD25C7, FD25T7, FD25W7,
	3t class	FD30C7, FD30T7, FD30W7,

B	1t class	FHD15C3, FHD15T3, FHD18C3, FHD18T3
	2t class	FD20C3, FD20C13, FD20T3, FD20T13, FD20W3, FD25C3, FD25C13, FD25T3, FD25T13, FD25W3
	3t class	FD30C3, FD30T3, FD30W3

FIG. 34

Item No. 見出番号	Part No. 部品番号	Mark 記号	Description 部品名称		Req'd 個数	Remarks : serial No. 備考：実施号車
1	A-23300-6K200		STARTER	ｽﾀｰﾀ	1	A
						INC.2-23
						STD,HCS,UL-DS
						12V
2	A-23310-0Y000		ARMATURE	ｱｰﾏﾁｭｱ	1	A
						INC.3,4
3	A-23319-M4900		BEARING	ﾍﾞｱﾘﾝｸﾞ	1	A
4	A-23338-M4900		BEARING	ﾍﾞｱﾘﾝｸﾞ	1	A
5	A-23306-6T000		COIL,FIEDL	ｺｲﾙ	1	A
						INC.6,7
6	A-23305-09500		SCREW	ｽｸﾘｭ	4	A
7	A-23379-57J05		BRUSH,(+)	ﾌﾞﾗｼ	2	A
8	A-23337-0Y000		COVER,REAR	ｶﾊﾞｰ	1	A
9	A-23378-57J05		HOLDER,BRUSH	ﾎﾙﾀﾞ	1	A
						INC.10,11
10	A-23333-W2500		SPRING,BRUSH	ｽﾌﾟﾘﾝｸﾞ	4	A
11	A-23379-57J05		BRUSH,(-)	ﾌﾞﾗｼ	2	A
A	A-23312-6T000		PINION ASSY,CLUTCH	ﾋﾟﾆｵﾝｱｯｾﾝ	1	A
						INC.12-16
12	A-23354-6T000		GEAR	ｷﾞﾔｰ	1	A
						INC.13,14
13	A-23358-07G00		BEARING	ﾍﾞｱﾘﾝｸﾞ	1	A
14	A-23363-07G00		BEARING	ﾍﾞｱﾘﾝｸﾞ	1	A
15	A-23357-6T000		SHAFT,PINION	ｼｬﾌﾄ	1	A
16	A-23465-M4900		SET,STOPPER	ｽﾄｯﾊﾟｾｯﾄ	1	A
17	A-23343-6T000		SWITCH,MAGNETIC	ｽｲｯﾁ	1	A
18	A-23318-6T000		CASE,PINION	ｹｰｽ	1	A
19	A-23341-43G00		RETAINER	ﾘﾃｰﾅ	1	A
20	A-23322-6T000		SET,SHIFT LEVER	ｼﾌﾄﾚﾊﾞｰｾｯﾄ	1	A
21	A-23470-6T000		KIT,DUST COVER	ﾀﾞｽﾄｶﾊﾞｰｷｯﾄ	1	A
22	A-23340-0Y000		BOLT,THROUGH	ﾎﾞﾙﾄ	2	A
23	A-23344-57J05		SCREW	ｽｸﾘｭ	2	A

FIG. 35 STARTER(INNER PARTS)(FOR STD) (B)
ｽﾀｰﾀ(ｲﾝﾅﾊﾟｰﾂ)(STD用)

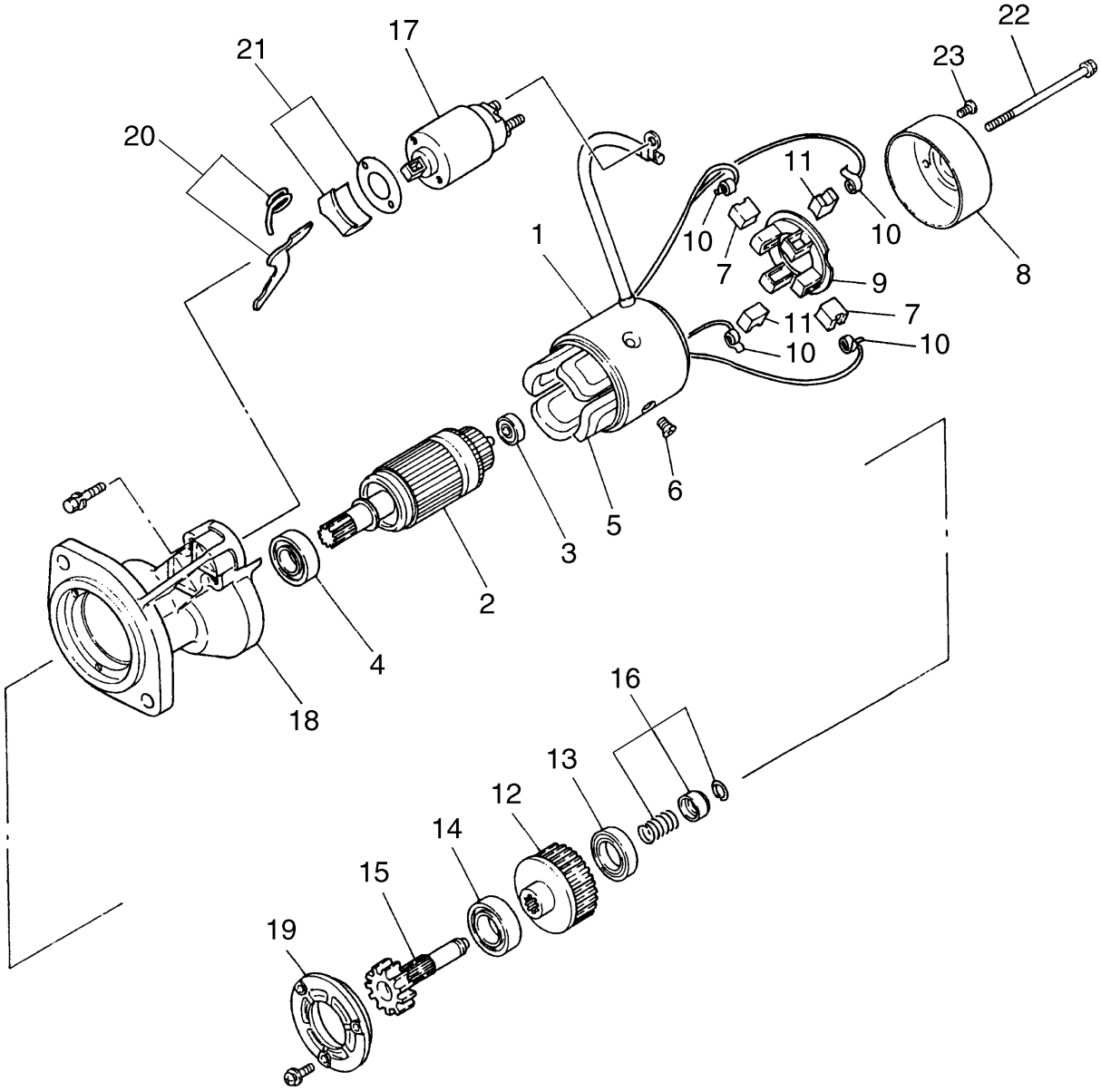

A	2t class	FD20C7, FD20T7, FD20W7, FD25C7, FD25T7, FD25W7,
	3t class	FD30C7, FD30T7, FD30W7,

B	1t class	FHD15C3, FHD15T3, FHD18C3, FHD18T3
	2t class	FD20C3, FD20C13, FD20T3, FD20T13, FD20W3, FD25C3, FD25C13, FD25T3, FD25T13, FD25W3
	3t class	FD30C3, FD30T3, FD30W3

FIG. 35

Item No. 見出番号	Part No. 部品番号	Mark 記号	Description 部品名称		Req'd 個数	Remarks : serial No. 備考：実施号車
1	A-23300-6K200		STARTER	ｽﾀｰﾀ	1	B
						INC.2-23
						12V
2	A-23310-0Y000		ARMATURE	ｱｰﾏﾁｭｱ	1	B
						INC.3,4
3	A-23319-M4900		BEARING	ﾍﾞｱﾘﾝｸﾞ	1	B
4	A-23338-M4900		BEARING	ﾍﾞｱﾘﾝｸﾞ	1	B
5	A-23306-6T000		COIL,FIEDL	ｺｲﾙ	1	B
						INC.6,7
6	A-23305-09500		SCREW	ｽｸﾘｭ	4	B
7	A-23379-57J05		BRUSH,(+)	ﾌﾞﾗｼ	2	B
8	A-23337-0Y000		COVER,REAR	ｶﾊﾞｰ	1	B
9	A-23378-57J05		HOLDER,BRUSH	ﾎﾙﾀﾞ	1	B
						INC.10,11
10	A-23333-W2500		SPRING,BRUSH	ｽﾌﾟﾘﾝｸﾞ	4	B
11	A-23379-57J05		BRUSH,(-)	ﾌﾞﾗｼ	2	B
A	A-23312-6T000		PINION ASSY,CLUTCH	ﾋﾟﾆｵﾝｱｯｾﾝ	1	B
						INC.12-16
12	A-23354-6T000		GEAR	ｷﾞﾔｰ	1	B
						INC.13,14
13	A-23358-07G00		BEARING	ﾍﾞｱﾘﾝｸﾞ	1	B
14	A-23363-07G00		BEARING	ﾍﾞｱﾘﾝｸﾞ	1	B
15	A-23357-6T000		SHAFT,PINION	ｼｬﾌﾄ	1	B
16	A-23465-M4900		SET,STOPPER	ｽﾄｯﾊﾟｾｯﾄ	1	B
17	A-23343-6T000		SWITCH,MAGNETIC	ｽｲｯﾁ	1	B
18	A-23318-6T000		CASE,PINION	ｹｰｽ	1	B
19	A-23341-43G00		RETAINER	ﾘﾃｰﾅ	1	B
20	A-23322-6T000		SET,SHIFT LEVER	ｼﾌﾄﾚﾊﾞｰｾｯﾄ	1	B
21	A-23470-6T000		KIT,DUST COVER	ﾀﾞｽﾄｶﾊﾞｰｷｯﾄ	1	B
22	A-23340-0Y000		BOLT,THROUGH	ﾎﾞﾙﾄ	2	B
23	A-23344-57J05		SCREW	ｽｸﾘｭ	2	B

FIG. 36 GENERATOR(FITTING PARTS) (A)
ｼﾞｪﾈﾚｰﾀ(ﾌｨｯﾃｨﾝｸﾞﾊﾟｰﾂ)

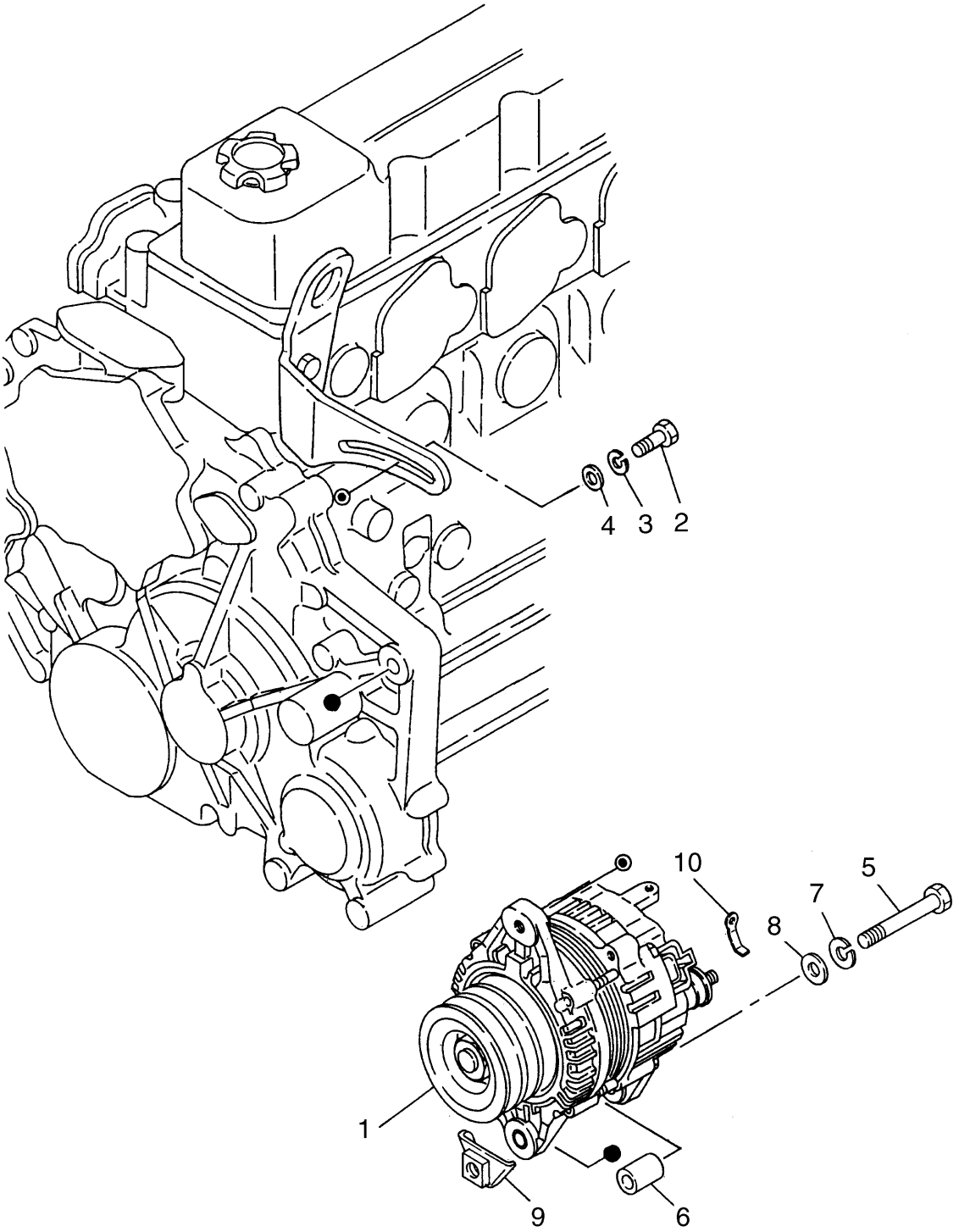

A	2t class	FD20C7, FD20T7, FD20W7, FD25C7, FD25T7, FD25W7,
	3t class	FD30C7, FD30T7, FD30W7,

B	1t class	FHD15C3, FHD15T3, FHD18C3, FHD18T3
	2t class	FD20C3, FD20C13, FD20T3, FD20T13, FD20W3, FD25C3, FD25C13, FD25T3, FD25T13, FD25W3
	3t class	FD30C3, FD30T3, FD30W3

FIG. 36

Item No. 見出番号	Part No. 部品番号	Mark 記号	Description 部品名称		Req'd 個数	Remarks : serial No. 備考：実施号車
1	A-23100-NA000		GENERATOR	ｼﾞｪﾈﾚｰﾀ	1	A:-751099 STD,OC,HCS 12V-60A
-	A-23100-NA00A		GENERATOR	ｼﾞｪﾈﾚｰﾀ	1	A:751100- STD,OC,HCS 12V-60A SEE FIG.38
-	A-23100-L2915		GENERATOR	ｼﾞｪﾈﾚｰﾀ	1	A UL-DS 12V-20A SEE FIG.40
-	A-23100-90078		GENERATOR	ｼﾞｪﾈﾚｰﾀ	1	A 24V(GE) 24V-30A SEE FIG.41
2	A-11716-6T000		BOLT	ﾎﾞﾙﾄ	1	A
3	A-08915-1381A		WASHER	ﾜｯｼｬ	1	A
4	A-33296-43G00		WASHER	ﾜｯｼｬ	1	A
5	A-08124-0051A		BOLT	ﾎﾞﾙﾄ	1	A
6	A-11713-40K00		SPACER	ｽﾍﾟｰｻ	1	A STD,OC,HCS,24V(GE)
-	A-11713-40K01		SPACER	ｽﾍﾟｰｻ	1	A UL-DS
7	A-08915-1401A		WASHER	ﾜｯｼｬ	1	A
8	A-08915-4401A		WASHER	ﾜｯｼｬ	1	A
9	A-11719-37N00		STOPPER	ｽﾄｯﾊﾟ	1	A STD,OC,HCS,24V(GE)
-	A-08911-2401A		STOPPER	ｽﾄｯﾊﾟ	1	A UL-DS
10	A-24210-S0900		CLIP	ｸﾘｯﾌﾟ	1	A

FIG. 37 GENERATOR(FITTING PARTS) (B)
ｼﾞｪﾈﾚｰﾀ(ﾌｨｯﾃｨﾝｸﾞﾊﾟｰﾂ)

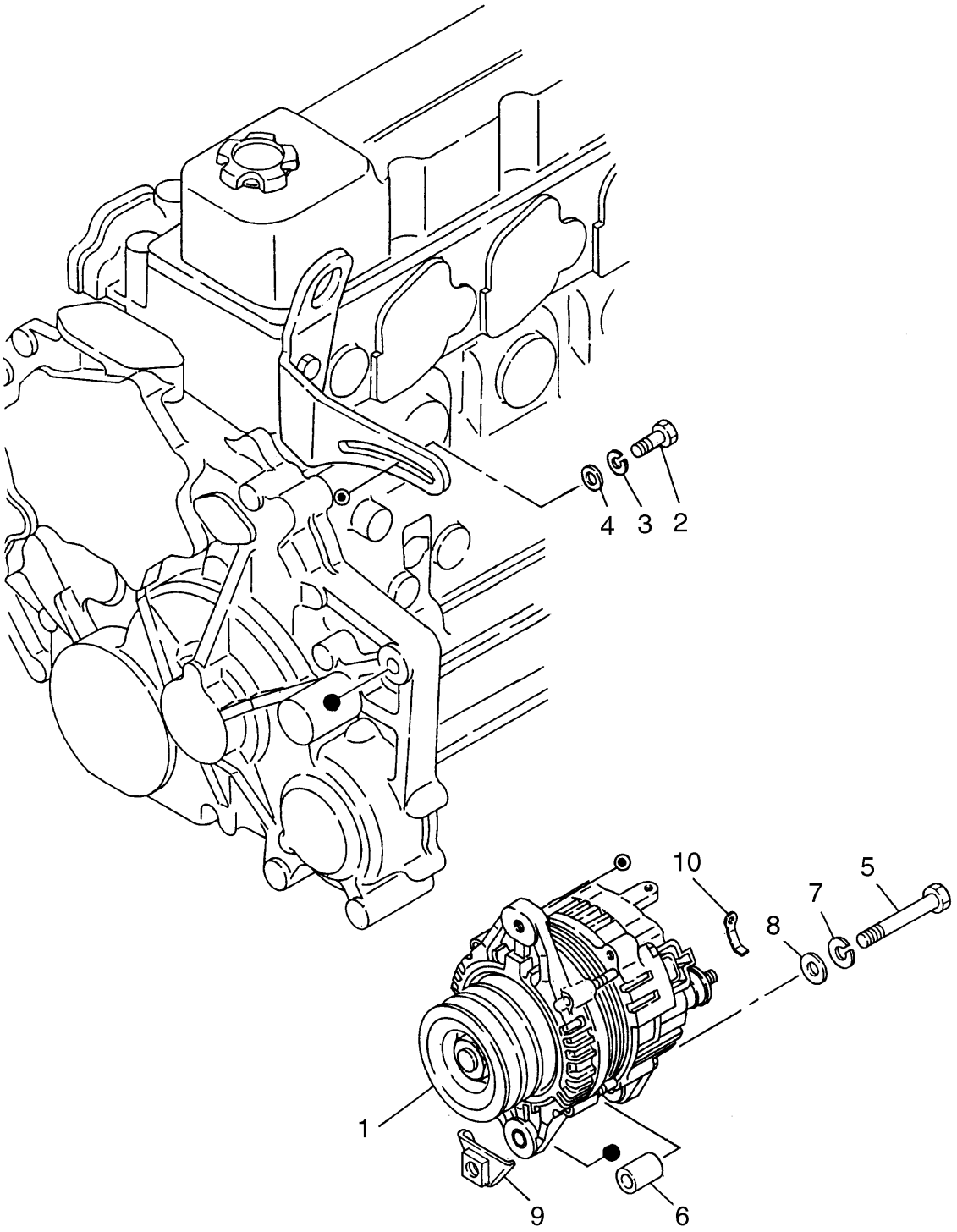

A	2t class	FD20C7, FD20T7, FD20W7, FD25C7, FD25T7, FD25W7,
	3t class	FD30C7, FD30T7, FD30W7,

B	1t class	FHD15C3, FHD15T3, FHD18C3, FHD18T3
	2t class	FD20C3, FD20C13, FD20T3, FD20T13, FD20W3, FD25C3, FD25C13, FD25T3, FD25T13, FD25W3
	3t class	FD30C3, FD30T3, FD30W3

FIG. 37

Item No. 見出番号	Part No. 部品番号	Mark 記号	Description 部品名称		Req'd 個数	Remarks : serial No. 備考：実施号車
1	A-23100-NA000		GENERATOR	ｼﾞｪﾈﾚｰﾀ	1	B:-751099 STD 12V-60A
-	A-23100-NA00A		GENERATOR	ｼﾞｪﾈﾚｰﾀ	1	B:751100- STD,OC 12V-60A SEE FIG.39
2	A-11716-6T000		BOLT	ﾎﾞﾙﾄ	1	B
3	A-08915-1381A		WASHER	ﾜｯｼｬ	1	B
4	A-33296-43G00		WASHER	ﾜｯｼｬ	1	B
5	A-08124-0051A		BOLT	ﾎﾞﾙﾄ	1	B
6	A-11713-40K00		SPACER	ｽﾍﾟｰｻ	1	B
7	A-08915-1401A		WASHER	ﾜｯｼｬ	1	B
8	A-08915-4401A		WASHER	ﾜｯｼｬ	1	B
9	A-11719-37N00		STOPPER	ｽﾄｯﾊﾟ	1	B
10	A-24210-S0900		CLIP	ｸﾘｯﾌﾟ	1	B

FIG. 38 GENERATOR(INNER PARTS)(FOR STD & OC & HCS)(751100-) (A)
ｼﾞｪﾈﾚｰﾀ(ｲﾝﾅﾊﾟｰﾂ)(STD&OC&HCS用)

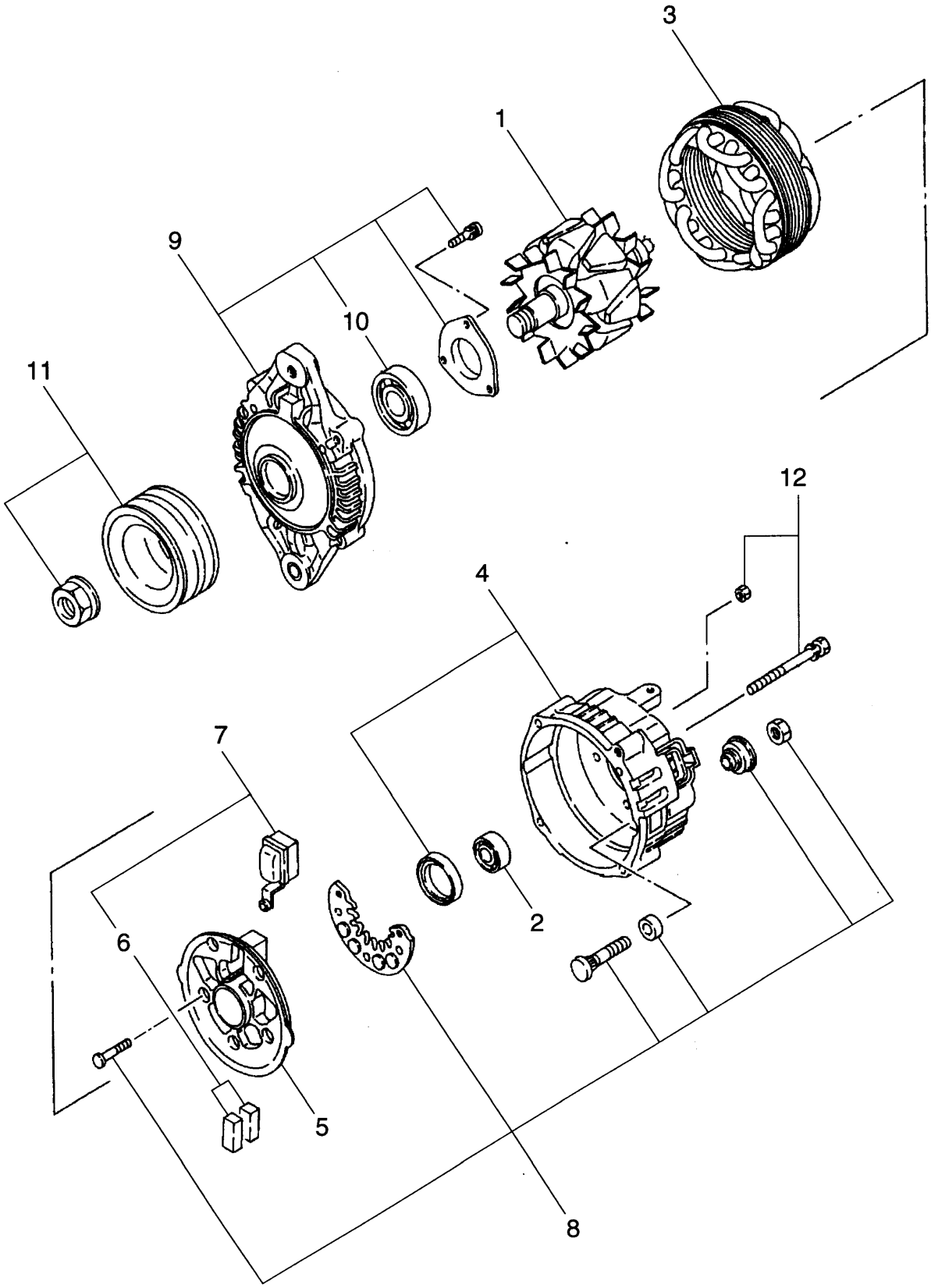

A	2t class	FD20C7, FD20T7, FD20W7, FD25C7, FD25T7, FD25W7,
	3t class	FD30C7, FD30T7, FD30W7,

B	1t class	FHD15C3, FHD15T3, FHD18C3, FHD18T3
	2t class	FD20C3, FD20C13, FD20T3, FD20T13, FD20W3, FD25C3, FD25C13, FD25T3, FD25T13, FD25W3
	3t class	FD30C3, FD30T3, FD30W3

FIG. 38

Item No. 見出番号	Part No. 部品番号	Mark 記号	Description 部品名称		Req'd 個数	Remarks : serial No. 備考：実施号車
A	A-23100-NA00A		GENERATOR ASSY	ｼﾞｪﾈﾚｰﾀｱｯｾﾝ	1	A
						INC.1-12
1	A-23108-0S300		ROTOR ASSY	ﾛｰﾀｱｯｾﾝ	1	A
						INC.2
2	A-23120-0M000		BEARING,BALL	ﾍﾞｱﾘﾝｸﾞ	1	A
3	A-23102-0S300		STATOR	ｽﾃｰﾀ	1	A
4	A-23127-NA00A		BRACKET ASSY,REAR	ﾌﾞﾗｹｯﾄｱｯｾﾝ	1	A
						INC.5-8
5	A-23124-NA00A		RECTIFIER ASSY	ﾚｸﾃｨﾌｧｲｱｱｯｾﾝ	1	A
						INC.6-8
6	A-23142-31U00		BRUSH SET	ﾌﾞﾗｼｾｯﾄ	1	A
7	A-23215-VW20A		REGURATOR ASSY	ﾚｷﾞｭﾚｰﾀｱｯｾﾝ	1	A
						INC.6
8	A-23230-7T402		DIODE ASSY	ﾀﾞｲｵｰﾄﾞｱｯｾﾝ	1	A
9	A-23118-7T400		BRACKET ASSY,FRONT	ﾌﾞﾗｹｯﾄｱｯｾﾝ	1	A
						INC.10
10	A-23120-0M005		BEARING,BALL	ﾍﾞｱﾘﾝｸﾞ	1	A
11	A-23150-65N00		PULLEY ASSY	ﾌﾟｰﾘｱｯｾﾝ	1	A
12	A-23200-7T400		KIT,SCREW	ｽｸﾘｭｷｯﾄ	1	A

FIG. 39 GENERATOR(INNER PARTS)(FOR STD & OC)(751100-) (B)
ｼﾞｪﾈﾚｰﾀ(ｲﾝﾅﾊﾟｰﾂ)(STD&OC用)

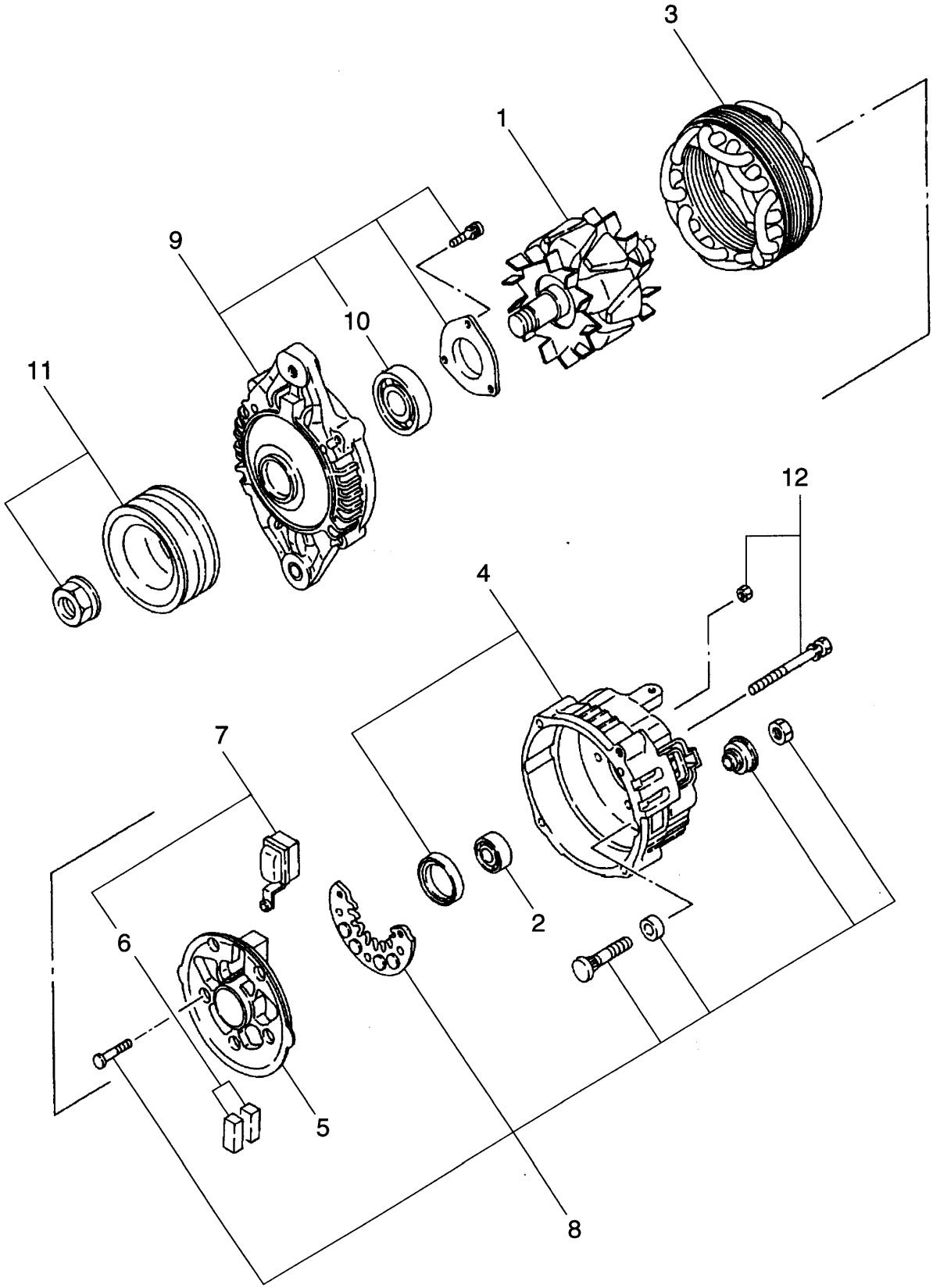

A	2t class	FD20C7, FD20T7, FD20W7, FD25C7, FD25T7, FD25W7,
	3t class	FD30C7, FD30T7, FD30W7,

B	1t class	FHD15C3, FHD15T3, FHD18C3, FHD18T3
	2t class	FD20C3, FD20C13, FD20T3, FD20T13, FD20W3, FD25C3, FD25C13, FD25T3, FD25T13, FD25W3
	3t class	FD30C3, FD30T3, FD30W3

FIG. 39

Item No. 見出番号	Part No. 部品番号	Mark 記号	Description 部品名称		Req'd 個数	Remarks : serial No. 備考：実施号車
A	A-23100-NA00A		GENERATOR ASSY	ｼﾞｪﾈﾚｰﾀｱｯｾﾝ	1	B
						INC.1-12
1	A-23108-0S300		ROTOR ASSY	ﾛｰﾀｱｯｾﾝ	1	B
						INC.2
2	A-23120-0M000		BEARING,BALL	ﾍﾞｱﾘﾝｸﾞ	1	B
3	A-23102-0S300		STATOR	ｽﾃｰﾀ	1	B
4	A-23127-NA00A		BRACKET ASSY,REAR	ﾌﾞﾗｹｯﾄｱｯｾﾝ	1	B
						INC.5-8
5	A-23124-NA00A		RECTIFIER ASSY	ﾚｸﾃｨﾌｧｲｱｱｯｾﾝ	1	B
						INC.6-8
6	A-23142-31U00		BRUSH SET	ﾌﾞﾗｼｾｯﾄ	1	B
7	A-23215-VW20A		REGURATOR ASSY	ﾚｷﾞｭﾚｰﾀｱｯｾﾝ	1	B
						INC.6
8	A-23230-7T402		DIODE ASSY	ﾀﾞｲｵｰﾄﾞｱｯｾﾝ	1	B
9	A-23118-7T400		BRACKET ASSY,FRONT	ﾌﾞﾗｹｯﾄｱｯｾﾝ	1	B
						INC.10
10	A-23120-0M005		BEARING,BALL	ﾍﾞｱﾘﾝｸﾞ	1	B
11	A-23150-65N00		PULLEY ASSY	ﾌﾟｰﾘｱｯｾﾝ	1	B
12	A-23200-7T400		KIT,SCREW	ｽｸﾘｭｷｯﾄ	1	B

FIG. 40 GENERATOR(INNER PARTS)(FOR UL-DS) (A)
ｼﾞｪﾈﾚｰﾀ(ｲﾝﾅﾊﾟｰﾂ)(UL-DS用)

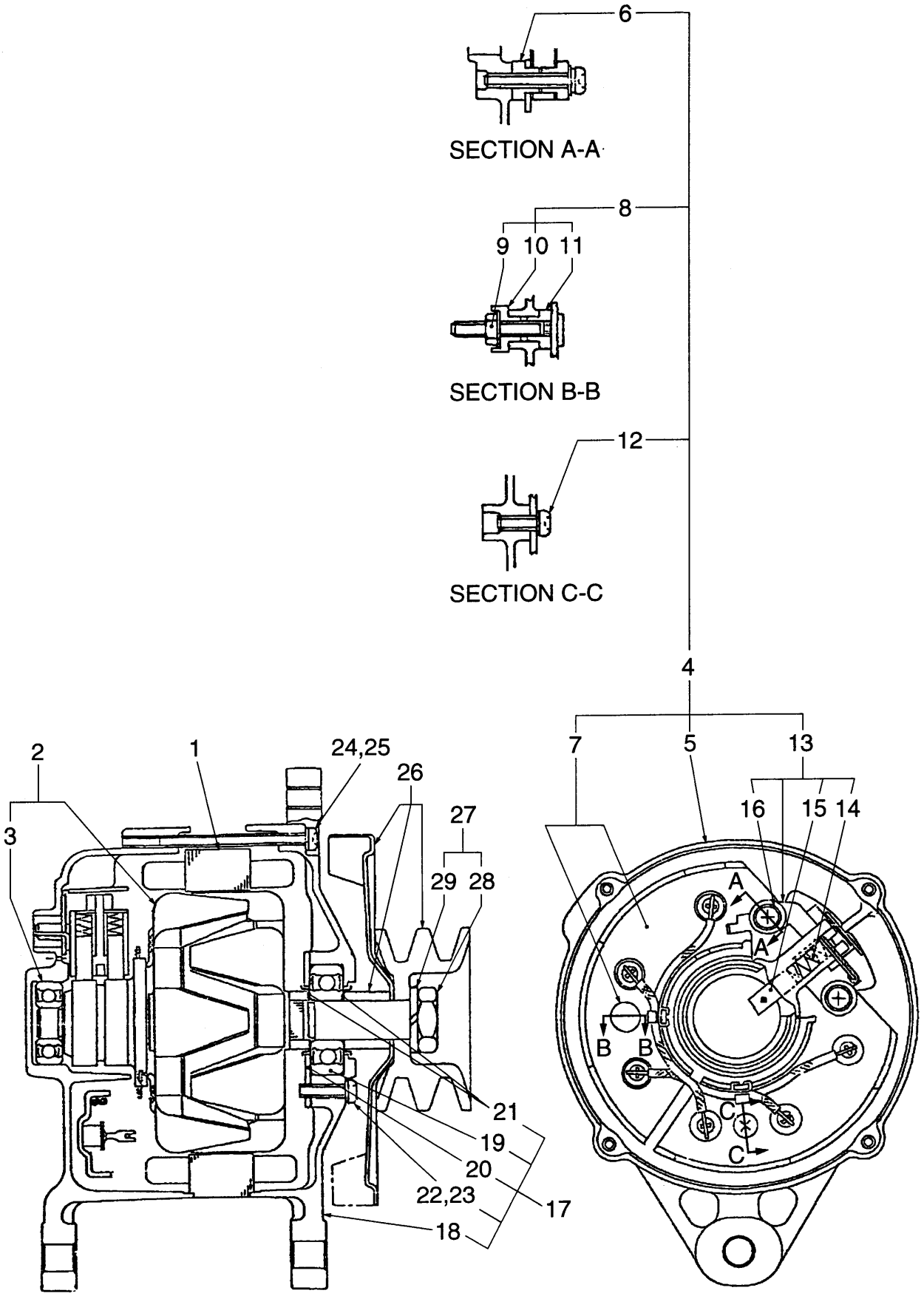

A	2t class	FD20C7, FD20T7, FD20W7, FD25C7, FD25T7, FD25W7,
	3t class	FD30C7, FD30T7, FD30W7,

B	1t class	FHD15C3, FHD15T3, FHD18C3, FHD18T3
	2t class	FD20C3, FD20C13, FD20T3, FD20T13, FD20W3, FD25C3, FD25C13, FD25T3, FD25T13, FD25W3
	3t class	FD30C3, FD30T3, FD30W3

FIG. 40

Item No. 見出番号	Part No. 部品番号	Mark 記号	Description 部品名称		Req'd 個数	Remarks : serial No. 備考：実施号車
A	A-23100-L2915		ALTERNATOR ASSY	ｵﾙﾀﾈｰﾀｱｯｾﾝ	1	A
						INC.1-29
						UL-DS
1	A-23102-L2915		STATOR	ｽﾃｰﾀ	1	A
2	A-23108-L2915		ROTOR ASSY	ﾛｰﾀｱｯｾﾝ	1	A
						INC.3
3	A-23120-P4510		BEARING,REAR	ﾍﾞｱﾘﾝｸﾞ	1	A
4	A-23127-L2915		BRACKET ASSY,REAR	ﾌﾞﾗｹｯﾄｱｯｾﾝ	1	A
						INC.5-16
5	NO PART NO.	#	BRACKET,REAR	ﾌﾞﾗｹｯﾄ	1	A
6	A-23170-P4510		INSULATOR	ｲﾝｼｭﾚｰﾀ	1	A
7	A-23230-U0512		RECTIFIER ASSY	ﾚｸﾃｨﾌｧｲｱｱｯｾﾝ	1	A
8	A-23158-U0110		SET,NUT	ﾅｯﾄｾｯﾄ	1	A
						INC.9-11
9	NO PART NO.	#	NUT&WASHER	ﾅｯﾄ&ﾜｯｼｬ	1	A
10	NO PART NO.	#	INSULATOR	ｲﾝｼｭﾚｰﾀ	1	A
11	NO PART NO.	#	INSULATOR	ｲﾝｼｭﾚｰﾀ	3	A
12	A-23157-Z9000		SCREW	ｽｸﾘｭ	1	A
13	A-23133-P4510		HOLDER ASSY,BRUSH	ﾎﾙﾀﾞｱｯｾﾝ	1	A
						INC.14-16
14	A-23138-A5510		SPRING,BRUSH	ｽﾌﾟﾘﾝｸﾞ	2	A
15	A-23135-P4510		BRUSH	ﾌﾞﾗｼ	2	A
16	NO PART NO.	#	SCREW	ｽｸﾘｭ	2	A
17	A-23250-L2915		BRACKET ASSY,FRONT	ﾌﾞﾗｹｯﾄｱｯｾﾝ	1	A
						INC.18-23
18	NO PART NO.	#	BRACKET,FRONT	ﾌﾞﾗｹｯﾄ	1	A
19	A-23120-90015		BEARING,FRONT	ﾍﾞｱﾘﾝｸﾞ	1	A
20	NO PART NO.	#	RETAINER,BEARING	ﾘﾃｰﾅ	1	A
21	NO PART NO.	#	SEAL	ｼｰﾙ	2	A
22	A-23115-A5510		SET,SCREW	ｽｸﾘｭｾｯﾄ	1	A
						INC.23
23	A-23141-U0110		SCREW	ｽｸﾘｭ	3	A
24	A-23131-U0510		SET,BOLT	ﾎﾞﾙﾄｾｯﾄ	1	A
						INC.25
25	NO PART NO.	#	BOLT	ﾎﾞﾙﾄ	4	A
26	A-23150-L2915		PULLEY ASSY	ﾌﾟｰﾘｱｯｾﾝ	1	A
27	A-23153-U0110		SET,NUT	ﾅｯﾄｾｯﾄ	1	A
						INC.28,29
28	NO PART NO.	#	NUT	ﾅｯﾄ	1	A
29	NO PART NO.	#	WASHER,SPRING	ﾜｯｼｬ	1	A

FIG. 41 GENERATOR(INNER PARTS)(FOR 24V(GE)) (A)
ｼﾞｪﾈﾚｰﾀ(ｲﾝﾅﾊﾟｰﾂ)(24V(GE)用)

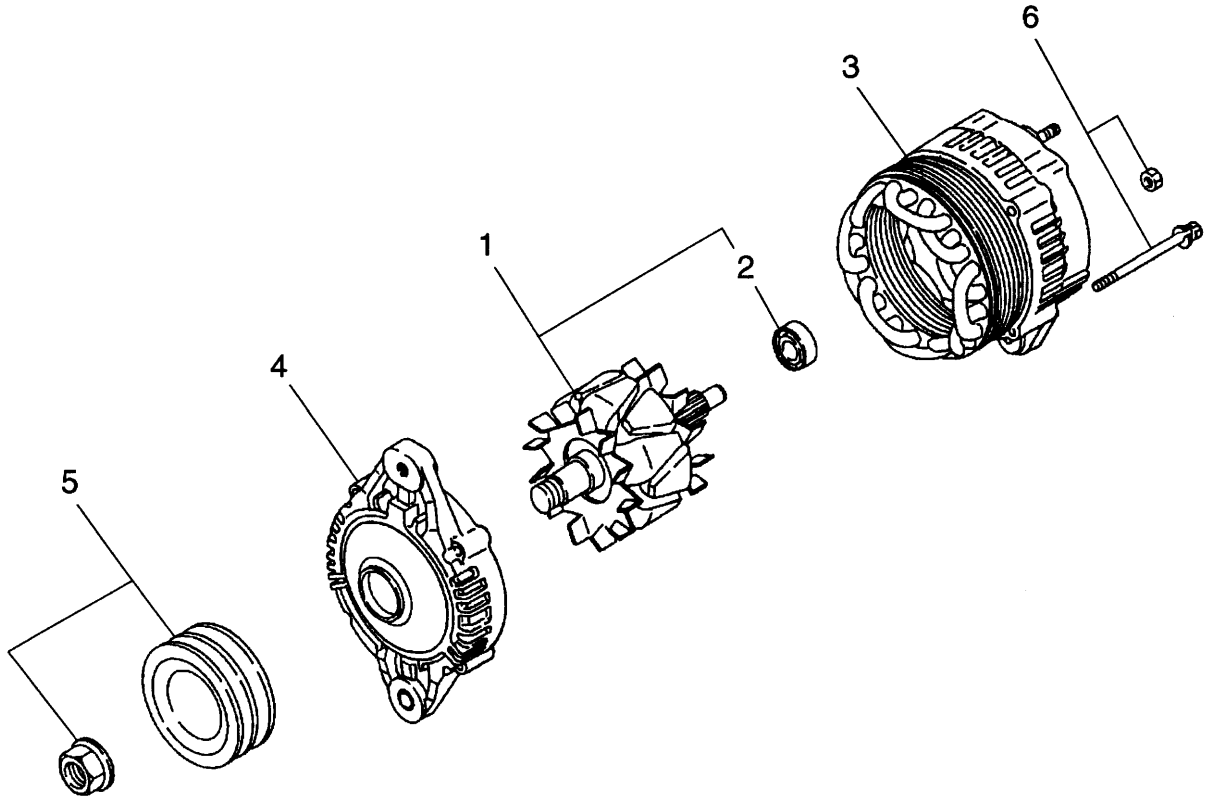

A	2t class	FD20C7, FD20T7, FD20W7, FD25C7, FD25T7, FD25W7,
	3t class	FD30C7, FD30T7, FD30W7,

B	1t class	FHD15C3, FHD15T3, FHD18C3, FHD18T3
	2t class	FD20C3, FD20C13, FD20T3, FD20T13, FD20W3, FD25C3, FD25C13, FD25T3, FD25T13, FD25W3
	3t class	FD30C3, FD30T3, FD30W3

FIG. 41

Item No. 見出番号	Part No. 部品番号	Mark 記号	Description 部品名称		Req'd 個数	Remarks : serial No. 備考：実施号車
A	A-23100-90078		GENERATOR ASSY	ｼﾞｪﾈﾚｰﾀｱｯｾﾝ	1	A INC.1-6 24V(GE)
1	A-23108-99308		ROTOR ASSY	ﾛｰﾀｱｯｾﾝ	1	A INC.2
2	A-23120-0M000		BEARING,BALL	ﾍﾞｱﾘﾝｸﾞ	1	A
3	A-23128-99415		BRACKET ASSY,REAR	ﾌﾞﾗｹｯﾄｱｯｾﾝ	1	A
4	A-23119-99215		BRACKET ASSY,FRONT	ﾌﾞﾗｹｯﾄｱｯｾﾝ	1	A
5	A-23151-99602		PULLEY ASSY	ﾌﾟｰﾘｱｯｾﾝ	1	A
6	A-23138-99019		KIT,SCREW	ｽｸﾘｭｷｯﾄ	1	A

FIG. 42 ELECTRICAL PARTS (A)
エレクトリカルパーツ

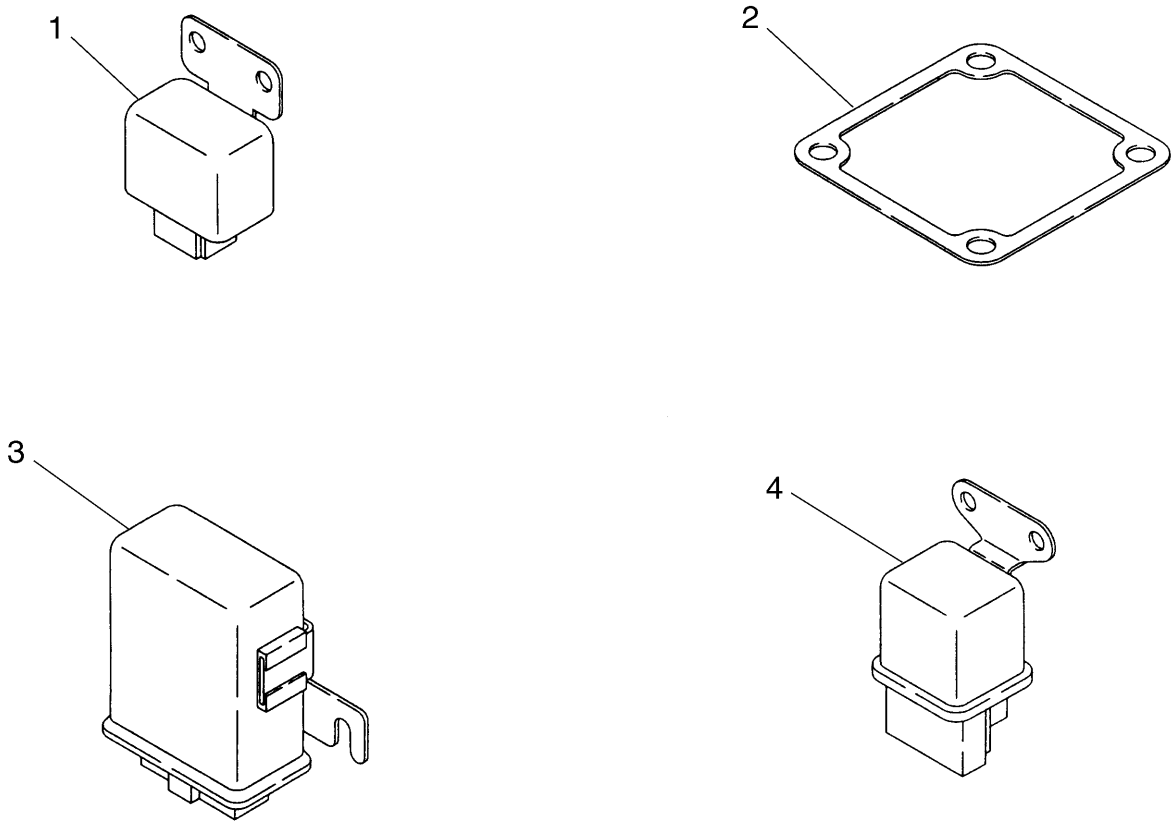

A	2t class	FD20C7, FD20T7, FD20W7, FD25C7, FD25T7, FD25W7,
	3t class	FD30C7, FD30T7, FD30W7,

B	1t class	FHD15C3, FHD15T3, FHD18C3, FHD18T3
	2t class	FD20C3, FD20C13, FD20T3, FD20T13, FD20W3, FD25C3, FD25C13, FD25T3, FD25T13, FD25W3
	3t class	FD30C3, FD30T3, FD30W3

FIG. 42

Item No. 見出番号	Part No. 部品番号	Mark 記号	Description 部品名称		Req'd 個数	Remarks : serial No. 備考：実施号車
1	A-16470-95000		DETECTOR,FUEL	ﾃﾞﾃｸﾀ	1	A
2	A-14064-54T00		GASKET,DUCT	ｶﾞｽｹｯﾄ	1	A
3	A-11067-90063		TIMER,GLOW	ﾀｲﾏ	1	A
4	A-25230-18A00		RELAY,GLOW	ﾘﾚｰ	1	A

FIG. 43 ELECTRICAL PARTS (B)
エレクトリカルパーツ

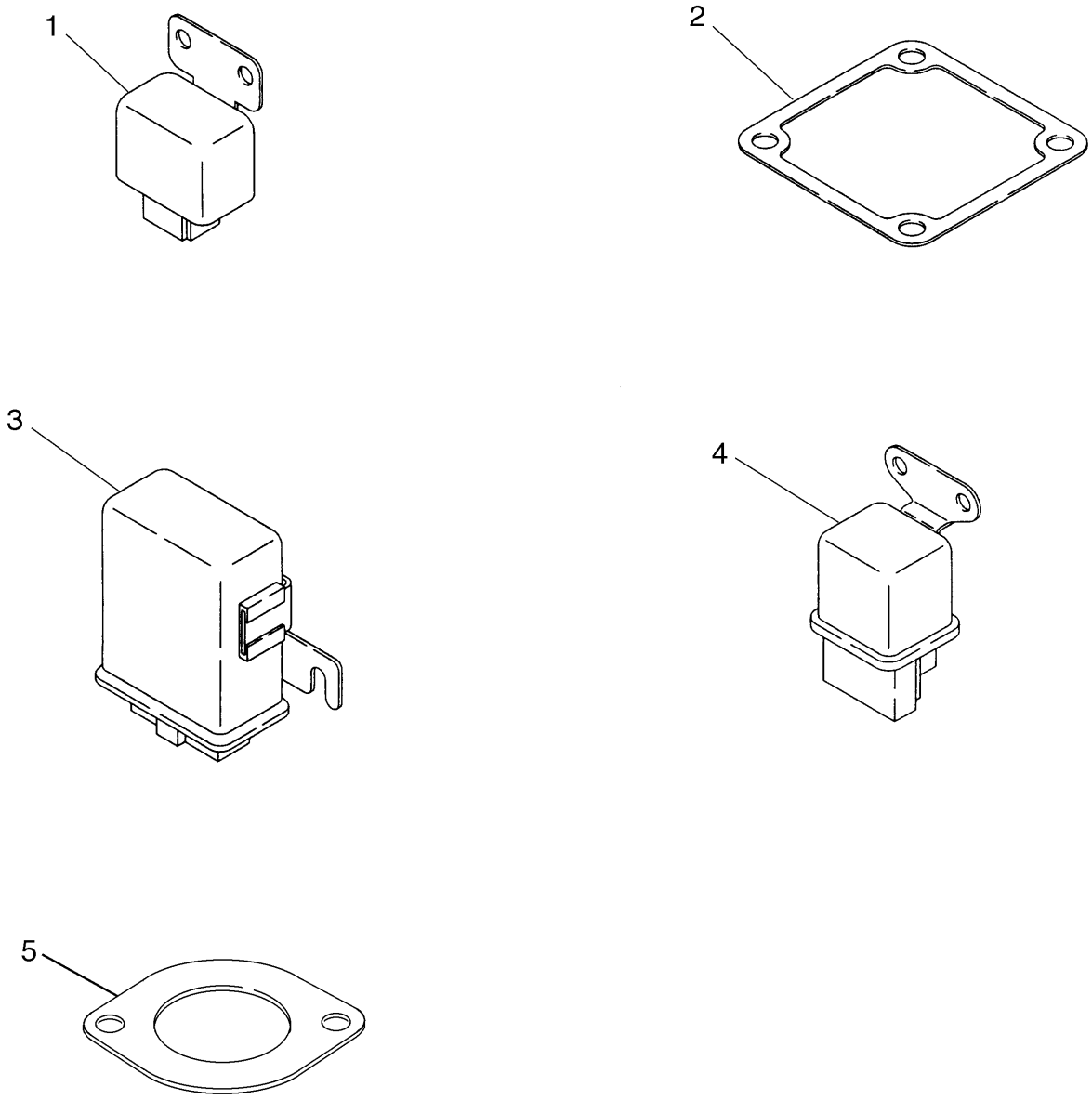

A	2t class	FD20C7, FD20T7, FD20W7, FD25C7, FD25T7, FD25W7,
	3t class	FD30C7, FD30T7, FD30W7,

B	1t class	FHD15C3, FHD15T3, FHD18C3, FHD18T3
	2t class	FD20C3, FD20C13, FD20T3, FD20T13, FD20W3, FD25C3, FD25C13, FD25T3, FD25T13, FD25W3
	3t class	FD30C3, FD30T3, FD30W3

FIG. 43

Item No. 見出番号	Part No. 部品番号	Mark 記号	Description 部品名称		Req'd 個数	Remarks : serial No. 備考：実施号車
1	A-16470-95000		DETECTOR,FUEL	ﾃﾞﾃｸﾀ	1	B
2	A-14064-54T00		GASKET,DUCT	ｶﾞｽｹｯﾄ	1	B
3	A-11067-90063		TIMER,GLOW	ﾀｲﾏ	1	B
4	A-25230-18A00		RELAY,GLOW	ﾘﾚｰ	1	B
5	A-20017-NA001		GASKET	ｶﾞｽｹｯﾄ	1	B

PARTS NUMBER INDEX　部品番号索引表

PART No. 部品番号	FIG.NO. 図番号	PART No. 部品番号	FIG.NO. 図番号	PART No. 部品番号	FIG.NO. 図番号	PART No. 部品番号	FIG.NO. 図番号
A-00922-12000	21	A-026508-1140	29A	A-08121-0001A	10	A-08915-1381A	33
A-00922-12000	22	A-027412-2440	29	A-08121-0001A	11	A-08915-1381A	36
A-00922-24700	4	A-027412-2440	29A	A-08121-0201E	26	A-08915-1381A	37
A-00922-24700	5	A-05412-1800P	18	A-08121-0201E	27	A-08915-1401A	10
A-00922-25200	21	A-05412-1800P	19	A-08121-0301E	10	A-08915-1401A	11
A-00922-25200	22	A-08051-0501A	14	A-08121-0301E	11	A-08915-1401A	12
A-00922-26200	4	A-081A0-6161A	14	A-08121-0301E	26	A-08915-1401A	13
A-00922-26200	5	A-081B0-8201A	12	A-08121-0301E	27	A-08915-1401A	26
A-00926-41600	14	A-081B0-8201A	13	A-08121-0301E	32	A-08915-1401A	27
A-00931-20800	12	A-08120-61228	6	A-08121-0301E	33	A-08915-1401A	36
A-00931-20800	13	A-08120-61228	7	A-08121-0451E	10	A-08915-1401A	37
A-00933-20650	12	A-08120-61628	14	A-08121-0451E	11	A-08915-1421A	26
A-00933-20650	13	A-08120-61633	4	A-08121-0501E	4	A-08915-1421A	27
A-01001-20024	4	A-08120-61633	5	A-08121-0501E	5	A-08915-1441A	21
A-01001-20024	5	A-08120-62028	12	A-08121-0701E	26	A-08915-1441A	22
A-01011-00074	4	A-08120-62028	13	A-08121-0701E	27	A-08915-33610	21
A-01011-00074	5	A-08120-62528	24	A-08121-0901A	26	A-08915-33610	22
A-010206-1040	28	A-08120-8031A	23	A-08121-0901A	27	A-08915-3401A	10
A-010206-1040	28A	A-08120-8161E	4	A-08124-0051A	36	A-08915-3401A	11
A-01111-16144	4	A-08120-8161E	4	A-08124-0051A	37	A-08915-43610	21
A-01111-16144	5	A-08120-8161E	5	A-08170-66510	21	A-08915-43610	22
A-01125-00104	4	A-08120-8161E	5	A-08170-66510	22	A-08915-4401A	4
A-01125-00104	5	A-08120-8161E	18	A-08170-8501A	14	A-08915-4401A	5
A-01151-01004	16	A-08120-8161E	19	A-08171-0201A	12	A-08915-4401A	10
A-01211-01054	26	A-08120-8201E	18	A-08171-0201A	13	A-08915-4401A	11
A-01211-01054	27	A-08120-8201E	18	A-08223-81810	4	A-08915-4401A	36
A-01225-00112	14	A-08120-8201E	18	A-08223-81810	5	A-08915-4401A	37
A-013020-6040	28	A-08120-8201E	19	A-08223-82210	12	A-08918-1401A	21
A-013020-6040	28	A-08120-8201E	19	A-08223-82210	13	A-08918-1401A	22
A-013020-6040	28A	A-08120-8201E	19	A-08223-82810	12	A-08918-2081A	26
A-013020-6040	28A	A-08120-8201E	21	A-08223-82810	13	A-08918-2081A	27
A-014110-6440	28	A-08120-8201E	22	A-08227-02510	17	A-08931-5021A	18
A-014110-6440	28A	A-08120-8251E	2	A-08227-03040	12	A-08931-5021A	19
A-01522-05104	2	A-08120-8251E	15	A-08227-03040	13	A-08931-5081A	2
A-01522-10224	3	A-08120-8251E	20	A-08227-08010	2	A-08931-5121A	6
A-01558-00111	24	A-08120-8251E	21	A-08911-1081G	4	A-10006-43G00	12
A-01558-00124	12	A-08120-8251E	22	A-08911-1081G	5	A-10006-43G00	13
A-01558-00124	13	A-08120-8251E	23	A-08911-1081G	15	A-10101-Z9826	1
A-01612-11134	4	A-08120-8251E	23	A-08911-1081G	20	A-10101-Z9826	2
A-01612-11134	5	A-08120-8251E	30	A-08911-2401A	4	A-10101-Z9826	4
A-01642-03004	2	A-08120-8301E	4	A-08911-2401A	5	A-10101-Z9826	5
A-01642-03004	2	A-08120-8301E	5	A-08911-2401A	36	A-10101-Z9826	6
A-01642-03004	2	A-08120-8401E	4	A-08911-2441A	21	A-10101-Z9826	7
A-01648-00024	2	A-08120-8401E	5	A-08911-2441A	22	A-10101-Z9826	12
A-01648-00024	12	A-08120-8451E	4	A-08911-3081A	32	A-10101-Z9826	13
A-01648-00024	13	A-08120-8451E	5	A-08911-3081A	33	A-10101-Z9826	15
A-01648-00044	12	A-08120-8451E	18	A-08911-6401A	16	A-10101-Z9826	16
A-01648-00044	13	A-08120-8451E	19	A-08911-6401A	17	A-10101-Z9826	17
A-01648-00084	2	A-08120-8451E	20	A-08912-80610	6	A-10101-Z9826	18
A-01648-00154	2	A-08120-8601F	14	A-08912-80610	7	A-10101-Z9826	19
A-01648-00224	2	A-08120-8651E	4	A-08915-13410	12	A-10101-Z9826	20
A-01648-00224	2	A-08120-8651E	5	A-08915-13410	13	A-10101-Z9826	21
A-01931-00134	10	A-08120-8701E	4	A-08915-1381A	4	A-10101-Z9826	22
A-01931-00134	11	A-08120-8701E	5	A-08915-1381A	4	A-10101-Z9826	23
A-01931-00394	4	A-08120-8751A	23	A-08915-1381A	5	A-10101-Z9826	26
A-01931-00394	5	A-08120-8851A	4	A-08915-1381A	5	A-10101-Z9826	27
A-02173-02820	30	A-08120-8851A	5	A-08915-1381A	14	A-11009-40K01	2
A-026508-1140	29	A-08120-8901A	4	A-08915-1381A	23	A-11009-40K02	2
A-026508-1140	29	A-08120-8901A	5	A-08915-1381A	23	A-11012-2S000	2
A-026508-1140	29A	A-08120-8901A	23	A-08915-1381A	32	A-11012-43G00	2

PARTS NUMBER INDEX　部品番号索引表

PART No. 部品番号	FIG.NO. 図番号	PART No. 部品番号	FIG.NO. 図番号	PART No. 部品番号	FIG.NO. 図番号	PART No. 部品番号	FIG.NO. 図番号
A-11012-43G10	2	A-11140-2T700	7	A-12279-43G05	2	A-13015-43G01	14
A-11013-T9000	2	A-11140-54T02	6	A-12280-37525	3	A-13016-41K00	4
A-11019-90002	2	A-11150-54T00	6	A-12280-37526	3	A-13016-41K00	5
A-11021-J2000	2	A-11150-54T00	7	A-12280-37527	3	A-13016-54T00	14
A-11021-J2000	2	A-11713-40K00	36	A-12280-37528	3	A-13021-40K00	4
A-11021-J2000	23	A-11713-40K00	37	A-12280-37529	3	A-13021-40K00	5
A-11024-54T00	2	A-11713-40K01	36	A-12293-0W800	2	A-13021-43G01	3
A-11026-61000	6	A-11715-40K00	12	A-12293-0W801	2	A-13024-0T600	14
A-11026-61000	7	A-11715-40K00	13	A-12298-34N00	1	A-13030-37500	14
A-11033-43G03	12	A-11716-6T000	36	A-12298-34N00	2	A-13031-41K00	4
A-11033-43G03	13	A-11716-6T000	37	A-12304-41K01	8	A-13031-41K00	5
A-11039-40K02	12	A-11719-37N00	36	A-12304-41K01	9	A-13031-5K400	4
A-11039-40K02	13	A-11719-37N00	37	A-12304-6K200	8	A-13031-5K400	5
A-11044-43G01	1	A-11720-NA000	21	A-12304-6K200	9	A-13034-NA002	4
A-11044-43G01	12	A-11720-NA000	22	A-12309-62503	3	A-13034-NA002	5
A-11044-43G01	13	A-11720-NA002	21	A-12310-NA000	8	A-13034-41K01	4
A-11044-43G02	12	A-11720-NA002	22	A-12310-NA000	9	A-13034-41K01	5
A-11044-43G02	13	A-11720-NA003	21	A-12310-NA002	8	A-13034-6K202	4
A-11044-43G03	12	A-11720-NA003	22	A-12310-NA002	9	A-13034-6K202	5
A-11044-43G03	13	A-11720-41K05	21	A-12312-L1800	8	A-13037-54T01	1
A-11056-09D61	12	A-11720-41K05	22	A-12312-L1800	9	A-13037-54T01	4
A-11056-09D61	13	A-11810-43G00	12	A-12313-L1122	10	A-13037-54T01	5
A-11060-43G00	23	A-11810-43G00	13	A-12313-L1122	11	A-13039-34N00	4
A-11061-NA003	23	A-11826-40K00	12	A-12313-10600	2	A-13039-34N00	5
A-11062-34N01	1	A-11826-40K00	13	A-12313-10600	8	A-13040-09W00	4
A-11062-34N01	23	A-11914-41K00	4	A-12313-10600	9	A-13040-09W00	5
A-11065-10T01	12	A-11914-41K00	5	A-12313-40K00	4	A-13081-40K00	2
A-11065-63G00	12	A-11915-J5501	4	A-12313-40K00	5	A-13201-43G01	14
A-11065-63G00	13	A-11915-J5501	5	A-12315-2W200	8	A-13202-43G01	14
A-11066-0W800	12	A-11915-J5502	4	A-12316-L2001	8	A-13203-90010	14
A-11066-0W800	13	A-11915-J5502	5	A-12316-L2001	9	A-13207-V1700	14
A-11067-90063	42	A-11925-NA000	4	A-12320-NA000	10	A-13208-Z5500	14
A-11067-90063	43	A-11925-NA000	5	A-12320-NA000	11	A-13209-43G01	14
A-11072-34N02	1	A-11926-NA000	4	A-12320-40K01	10	A-13212-54T01	12
A-11072-34N02	23	A-11926-NA000	5	A-12320-40K01	11	A-13212-54T01	13
A-11076-40K01	12	A-11927-Y7500	4	A-12322-K7320	10	A-13222-43G00	14
A-11076-40K01	13	A-11927-Y7500	5	A-12322-K7320	11	A-13223-43G01	14
A-11086-43G00	12	A-12010-6T005	3	A-12323-L1122	10	A-13224-0W800	12
A-11086-43G00	13	A-12010-6T015	3	A-12323-L1122	11	A-13224-0W800	13
A-11098-45N00	12	A-12030-31N00	3	A-12325-L1122	10	A-13231-54T02	14
A-11098-45N00	13	A-12032-54T00	3	A-12325-L1122	11	A-13234-43G01	14
A-11099-45N00	12	A-12033-6T011	3	A-12330-40K00	8	A-13238-43G00	14
A-11099-45N00	13	A-12100-0W802	3	A-12331-40K00	8	A-13252-43G02	14
A-11099-45N10	12	A-12109-43G00	3	A-12333-02N01	8	A-13255-43G00	14
A-11099-45N10	13	A-12111-2W200	3	A-12333-40K20	8	A-13256-43G01	14
A-11099-45N11	12	A-12112-43G00	3	A-12333-40K20	9	A-13256-43G02	14
A-11099-45N11	13	A-12117-2W200	3	A-13001-54T03	14	A-13257-63G01	14
A-11110-02N09	7	A-12118-2W200	3	A-13002-43G00	2	A-13258-63G01	14
A-11110-2T704	6	A-12119-2W200	3	A-13002-43G05	2	A-13265-02N02	12
A-11110-2T704	7	A-12120-2W200	3	A-13003-43G01	2	A-13265-02N02	13
A-11110-48K02	6	A-12123-Z5501	2	A-13003-43G02	2	A-13268-D0104	12
A-11121-38U00	4	A-12124-43G02	2	A-13003-43G03	2	A-13268-D0104	13
A-11121-38U00	5	A-12200-6T002	3	A-13003-43G06	2	A-13268-29N00	1
A-11121-63G03	1	A-12205-76200	3	A-13003-43G07	2	A-13268-29N00	12
A-11121-63G03	6	A-12207-2W211	3	A-13003-43G08	2	A-13268-29N00	13
A-11121-63G03	7	A-12209-2W211	3	A-13010-06J00	14	A-13270-43G03	1
A-11128-69200	6	A-12210-2W211	3	A-13011-43G00	14	A-13270-43G03	12
A-11128-69200	7	A-12211-2W211	3	A-13012-54T00	14	A-13270-43G03	13
A-11140-02N01	7	A-12212-2W211	3	A-13014-41K00	4	A-13297-43G00	14
A-11140-2T700	6	A-12279-43G05	1	A-13014-41K00	5	A-13510-40K01	1

PARTS NUMBER INDEX　部品番号索引表

PART No. 部品番号	FIG.NO. 図番号	PART No. 部品番号	FIG.NO. 図番号	PART No. 部品番号	FIG.NO. 図番号	PART No. 部品番号	FIG.NO. 図番号
A-13510-40K01	4	A-146203-0000	29	A-146420-3200	29	A-146574-0320	29
A-13510-40K01	5	A-146203-0000	29A	A-146420-3200	29A	A-146574-0320	29A
A-13560-54T00	4	A-146204-0000	29	A-146420-3700	29	A-146576-0200	29
A-13560-54T00	5	A-146204-0000	29A	A-146420-3700	29A	A-146576-0400	29A
A-139006-0200	28	A-146205-0000	29	A-146420-5600	29	A-146577-1900	29
A-139006-0200	28A	A-146205-0000	29A	A-146420-5600	29A	A-146577-2000	29
A-139104-0000	29	A-146206-0100	29	A-146421-0020	29	A-146577-2100	29
A-139104-0000	29A	A-146206-0100	29A	A-146421-0020	29A	A-146577-2200	29
A-139106-0100	29	A-146210-1720	29	A-146422-0000	29	A-146577-2300	29
A-139106-0100	29A	A-146210-1720	29A	A-146422-0000	29A	A-146577-2400	29
A-139106-0200	28	A-146210-5720	29	A-146430-0320	29	A-146577-2500	29
A-139106-0200	28A	A-146210-5720	29A	A-146430-0320	29A	A-146577-2600	29
A-139208-0900	28	A-146220-2120	29	A-146432-0000	29	A-146577-2700	29
A-139208-0900	28A	A-146220-2120	29A	A-146432-0000	29A	A-146577-6800	29
A-139308-0300	28	A-146230-0000	29	A-146433-0100	29	A-146577-6900	29
A-139308-0300	28A	A-146230-0000	29A	A-146433-0100	29A	A-146577-7000	29
A-139310-0200	28	A-146230-0100	29	A-146440-0220	29	A-146577-7100	29
A-139310-0200	28A	A-146230-0100	29A	A-146440-0220	29A	A-146577-7200	29
A-14003-41K01	15	A-146231-0001	29	A-146515-0320	28	A-146577-7300	29
A-14004-NA000	17	A-146231-0001	29A	A-146515-0320	28A	A-146577-7400	29
A-14004-41K00	16	A-146232-0320	29	A-146515-1820	28	A-146577-7500	29
A-14035-31N00	1	A-146232-0320	29A	A-146515-1820	28A	A-146579-2120	28
A-14035-31N00	15	A-146233-0000	29	A-146526-2800	28	A-146579-2120	28A
A-14036-43G00	1	A-146233-0000	29A	A-146526-2800	28A	A-146579-2720	28
A-14036-43G00	16	A-146234-0500	29	A-146526-6400	28	A-146579-2720	28A
A-14036-43G00	17	A-146234-0500	29A	A-146526-6400	28A	A-146579-2820	28
A-14038-96000	16	A-146300-0000	29	A-146530-0000	28	A-146579-2820	28A
A-14038-96000	17	A-146300-0000	29A	A-146530-0000	28A	A-146580-3900	28
A-14064-54T00	42	A-146301-0000	29	A-146530-0100	28	A-146580-3900	28A
A-14064-54T00	43	A-146301-0000	29A	A-146530-0100	28A	A-146588-0500	29
A-14065-41K00	4	A-146302-3500	29	A-146540-4000	28	A-146588-0500	29A
A-14065-41K00	5	A-146302-3500	29A	A-146540-4000	28A	A-146592-0400	28
A-14465-43G02	1	A-146302-3600	29	A-146540-4100	28	A-146592-0400	28A
A-14465-43G02	23	A-146302-3600	29A	A-146540-4100	28A	A-146594-0600	28
A-14465-43G20	1	A-146302-3700	29	A-146541-0000	28	A-146594-0600	28A
A-14465-43G20	4	A-146302-3700	29A	A-146541-0000	28A	A-146598-0600	28
A-14465-43G20	5	A-146303-0100	29	A-146545-3400	28	A-146598-0600	28A
A-14465-43G21	1	A-146303-0100	29A	A-146545-3400	28A	A-146598-0700	28
A-14465-43G21	4	A-146304-0000	29	A-146545-3500	28	A-146598-0700	28A
A-14465-43G21	5	A-146304-0000	29A	A-146545-3500	28A	A-146598-0800	28
A-146009-9220	29	A-146305-0000	29	A-146545-3600	28	A-146598-0800	28A
A-146009-9220	29A	A-146305-0000	29A	A-146545-3600	28A	A-146598-0900	28
A-146100-0020	29	A-146310-0100	29	A-146568-0000	29	A-146598-0900	28A
A-146100-0020	29A	A-146310-0100	29A	A-146568-0000	29A	A-146598-1000	28
A-146103-0000	29	A-146310-0700	29	A-146569-0300	29	A-146598-1000	28A
A-146103-0000	29A	A-146310-0700	29A	A-146569-0300	29A	A-146600-0000	29
A-146110-0220	29	A-146401-0520	29	A-146570-0100	29	A-146600-0000	29A
A-146110-0220	29A	A-146401-0520	29A	A-146570-0100	29A	A-146600-0100	28
A-146114-0000	29	A-146420-0200	29	A-146571-0000	29	A-146600-0100	28A
A-146114-0000	29A	A-146420-0200	29A	A-146571-0000	29A	A-146600-0200	28
A-146120-0120	28	A-146420-0700	29	A-146571-0100	29	A-146600-0200	28A
A-146120-0120	28A	A-146420-0700	29A	A-146571-0100	29A	A-146600-0400	29
A-146200-0000	29	A-146420-1200	29	A-146571-0200	29	A-146600-0400	29A
A-146200-0000	29A	A-146420-1200	29A	A-146571-0200	29A	A-146600-0500	29
A-146200-0020	29	A-146420-1700	29	A-146571-0300	29	A-146600-0500	29A
A-146200-0020	29A	A-146420-1700	29A	A-146571-0300	29A	A-146600-0600	29
A-146201-0000	29	A-146420-2200	29	A-146571-0400	29	A-146600-0600	29A
A-146201-0000	29A	A-146420-2200	29A	A-146571-0400	29A	A-146600-0700	29
A-146202-0100	29	A-146420-2700	29	A-146572-0020	29	A-146600-0700	29A
A-146202-0100	29A	A-146420-2700	29A	A-146572-0020	29A	A-146600-0800	29

PARTS NUMBER INDEX　部品番号索引表

PART No. 部品番号	FIG.NO. 図番号	PART No. 部品番号	FIG.NO. 図番号	PART No. 部品番号	FIG.NO. 図番号	PART No. 部品番号	FIG.NO. 図番号
A-146600-0800	29	A-146690-1600	29A	A-15208-43G00	19	A-16681-40K00	24
A-146600-0800	29A	A-146690-1700	29	A-15213-43G01	2	A-16682-40K00	24
A-146600-0800	29A	A-146690-1700	29A	A-15238-2S600	18	A-16683-40K00	24
A-146600-1120	29	A-146690-1800	29	A-15238-2S600	19	A-16696-43G01	24
A-146600-1120	29A	A-146690-1800	29A	A-15243-31N00	20	A-16697-21N00	24
A-146600-1200	28	A-146805-2120	28	A-15255-D5502	12	A-16698-43G01	24
A-146600-1200	28A	A-146805-2120	28A	A-15255-D5502	13	A-16699-43G00	24
A-146600-1700	29	A-146822-0220	28	A-15270-D0103	12	A-16700-NA002	26
A-146600-1700	29A	A-146822-0220	28A	A-15270-D0103	13	A-16700-NA002	27
A-146600-4400	28	A-146861-0120	28	A-15280-90001	20	A-16700-NA002	28A
A-146600-4400	28A	A-146861-0120	28A	A-15300-76200	20	A-16700-NA002	29A
A-146601-0900	29	A-146877-1020	29A	A-15303-61503	20	A-16700-0K701	26
A-146601-0900	29A	A-146877-1120	29A	A-15304-61501	20	A-16700-40K08	26
A-146602-0100	28	A-146877-1220	29A	A-16132-43G00	4	A-16700-40K11	26
A-146602-0100	28A	A-146877-1320	29A	A-16132-43G00	5	A-16700-40K11	27
A-146602-0600	29	A-146877-1420	29A	A-16400-41K00	30	A-16700-40K11	28
A-146602-0600	29A	A-146877-1520	29A	A-16400-41K00	31	A-16700-40K11	29
A-146602-2600	29	A-146877-1620	29A	A-16401-41K00	31	A-16701-R8100	1
A-146602-2600	29A	A-146877-1720	29A	A-16405-T9005	31	A-16701-R8100	26
A-146603-0100	29	A-146877-1820	29A	A-16406-T9001	31	A-16701-R8100	27
A-146603-0100	29A	A-146877-1920	29A	A-16407-T9001	31	A-16702-76200	4
A-146603-0200	29	A-146877-2020	29A	A-16407-W4900	31	A-16702-76200	5
A-146603-0200	29A	A-146877-2120	29A	A-16410-10H00	31	A-16735-40K00	26
A-146603-0300	29	A-146877-2220	29A	A-16412-10H00	31	A-16735-40K00	27
A-146603-0300	29A	A-146877-2320	29A	A-16413-10H00	31	A-16742-37501	26
A-146603-0400	29	A-146877-2420	29A	A-16420-43G00	26	A-16742-37501	27
A-146603-0400	29A	A-146877-2520	29A	A-16420-43G00	27	A-16794-10G00	23
A-146603-0700	29	A-146877-2620	29A	A-16445-2S000	24	A-16794-10G00	24
A-146603-0700	29	A-146936-1100	28	A-16470-95000	42	A-16794-10G00	30
A-146603-0700	29A	A-146936-1100	28A	A-16470-95000	43	A-16811-54T00	26
A-146603-0700	29A	A-146975-4200	29	A-16600-43G03	24	A-16811-54T00	27
A-146603-0800	29	A-146976-0700	29A	A-16600-43G03	25	A-16814-43G01	26
A-146603-0800	29A	A-146983-7200	29	A-16600-43G23	24	A-16814-43G01	27
A-146603-0900	29	A-146983-7200	29A	A-16610-43G01	25	A-17521-41K00	30
A-146603-0900	29A	A-15010-43G06	18	A-16612-43G00	25	A-19270-0K702	26
A-146603-1000	29	A-15010-43G06	19	A-16613-43G00	25	A-19270-0K703	26
A-146603-1000	29A	A-15025-43G01	1	A-16613-43G01	25	A-19270-0K704	26
A-146603-1100	29	A-15025-43G01	18	A-16613-43G02	25	A-19270-35V10	26
A-146603-1100	29A	A-15025-43G01	19	A-16613-43G03	25	A-19270-35V10	27
A-146603-3600	29	A-15050-02N01	19	A-16613-43G04	25	A-20017-NA001	43
A-146603-3600	29A	A-15050-2T701	18	A-16613-43G05	25	A-21010-40K05	21
A-146620-5000	29	A-15050-2T701	19	A-16613-43G06	25	A-21010-40K05	22
A-146620-5000	29	A-15050-54T04	18	A-16613-43G07	25	A-21014-34N01	1
A-146620-5000	29A	A-15053-80G00	1	A-16613-43G08	25	A-21014-34N01	21
A-146620-5000	29A	A-15053-80G00	18	A-16613-43G09	25	A-21014-34N01	22
A-146621-1700	28	A-15053-80G00	19	A-16615-43G00	25	A-21035-51H00	21
A-146621-1700	28	A-15056-02N00	6	A-16616-43G00	25	A-21035-51H00	22
A-146621-1700	28A	A-15056-02N00	7	A-16620-43G02	25	A-21035-65N00	4
A-146621-1700	28A	A-15075-43G00	2	A-16625-43G00	24	A-21035-65N00	5
A-146621-4901	29	A-15132-43G01	18	A-16625-43G02	12	A-21046-NA000	21
A-146621-4901	29A	A-15132-43G01	19	A-16625-43G02	13	A-21046-NA000	22
A-146650-0720	29	A-15133-06J01	18	A-16626-43G00	24	A-21048-NA000	21
A-146650-0720	29A	A-15133-06J01	19	A-16627-43G00	24	A-21048-NA000	22
A-146662-8320	29	A-15133-54T00	20	A-16629-43G01	25	A-21051-NA00A	21
A-146662-8320	29A	A-15134-43G01	18	A-16650-43G01	12	A-21051-NA00A	22
A-146690-1400	29	A-15134-43G01	19	A-16650-43G01	13	A-21051-44G00	21
A-146690-1400	29A	A-15191-41K01	2	A-16666-43G00	24	A-21051-44G00	22
A-146690-1500	29	A-15192-41K01	4	A-16670-43G00	24	A-21054-NA000	21
A-146690-1500	29A	A-15192-41K01	5	A-16678-43G01	24	A-21054-NA000	22
A-146690-1600	29	A-15208-43G00	18	A-16680-40K00	24	A-21060-90073	21

PARTS NUMBER INDEX　部品番号索引表

PART No. 部品番号	FIG.NO. 図番号	PART No. 部品番号	FIG.NO. 図番号	PART No. 部品番号	FIG.NO. 図番号	PART No. 部品番号	FIG.NO. 図番号
A-21060-90073	22	A-23131-U0510	40	A-23341-43G00	35		
A-21064-NA00A	21	A-23133-P4510	40	A-23343-6T000	34		
A-21064-NA00A	22	A-23135-P4510	40	A-23343-6T000	35		
A-21064-31W00	21	A-23138-A5510	40	A-23344-57J05	34		
A-21064-31W00	22	A-23138-99019	41	A-23344-57J05	35		
A-21113-90003	4	A-23141-U0110	40	A-23354-6T000	34		
A-21113-90003	5	A-23142-31U00	38	A-23354-6T000	35		
A-21114-NA000	21	A-23142-31U00	39	A-23357-6T000	34		
A-21114-NA000	22	A-23150-L2915	40	A-23357-6T000	35		
A-21170-69900	8	A-23150-43G01	4	A-23358-07G00	34		
A-21170-69900	9	A-23150-43G01	5	A-23358-07G00	35		
A-21200-05D02	23	A-23150-65N00	38	A-23363-07G00	34		
A-21304-34N00	1	A-23150-65N00	39	A-23363-07G00	35		
A-21304-34N00	20	A-23151-43G00	4	A-23378-57J05	34		
A-21305-54T02	20	A-23151-43G00	5	A-23378-57J05	35		
A-21320-31N00	20	A-23151-99602	41	A-23379-57J05	34		
A-21334-02N00	1	A-23153-U0110	40	A-23379-57J05	34		
A-21334-02N00	1	A-23157-Z9000	40	A-23379-57J05	35		
A-21334-02N00	18	A-23158-U0110	40	A-23379-57J05	35		
A-21334-02N00	19	A-23170-P4510	40	A-23465-M4900	34		
A-21334-02N00	20	A-23200-7T400	38	A-23465-M4900	35		
A-21334-05D04	20	A-23200-7T400	39	A-23470-6T000	34		
A-21355-54T00	20	A-23215-VW20A	38	A-23470-6T000	35		
A-22316-T8203	12	A-23215-VW20A	39	A-24210-S0900	36		
A-22316-T8203	13	A-23230-U0512	40	A-24210-S0900	37		
A-22630-10G00	23	A-23230-7T402	38	A-25080-89903	23		
A-23100-L2915	36	A-23230-7T402	39	A-25230-18A00	42		
A-23100-L2915	40	A-23250-L2915	40	A-25230-18A00	43		
A-23100-NA00A	36	A-23300-10T03	32	A-25240-Z5500	20		
A-23100-NA00A	37	A-23300-40K21	32	A-30412-K7320	10		
A-23100-NA00A	38	A-23300-40K21	33	A-30412-K7320	11		
A-23100-NA00A	39	A-23300-6K200	32	A-30412-P5100	2		
A-23100-NA000	36	A-23300-6K200	33	A-30412-P5100	2		
A-23100-NA000	37	A-23300-6K200	34	A-30412-40K20	8		
A-23100-90078	36	A-23300-6K200	35	A-30412-40K20	9		
A-23100-90078	41	A-23305-09500	34	A-30430-90013	10		
A-23102-L2915	40	A-23305-09500	35	A-30430-90013	11		
A-23102-0S300	38	A-23306-6T000	34	A-33023-90000	4		
A-23102-0S300	39	A-23306-6T000	35	A-33023-90000	5		
A-23108-L2915	40	A-23308-40K20	32	A-33296-43G00	36		
A-23108-0S300	38	A-23308-40K20	33	A-33296-43G00	37		
A-23108-0S300	39	A-23310-0Y000	34	A-33320-40K00	4		
A-23108-99308	41	A-23310-0Y000	35	A-33320-40K00	5		
A-23115-A5510	40	A-23312-6T000	34	A-33378-40K00	4		
A-23118-7T400	38	A-23312-6T000	35	A-33378-40K00	5		
A-23118-7T400	39	A-23318-6T000	34	A-33379-40K00	4		
A-23119-99215	41	A-23318-6T000	35	A-33379-40K00	5		
A-23120-P4510	40	A-23319-M4900	34	A-69170-L1400	4		
A-23120-0M000	38	A-23319-M4900	35	A-69170-L1400	5		
A-23120-0M000	39	A-23322-6T000	34	A-69190-41K01	4		
A-23120-0M000	41	A-23322-6T000	35	A-69190-41K01	5		
A-23120-0M005	38	A-23333-W2500	34	A-69763-10G01	4		
A-23120-0M005	39	A-23333-W2500	35	A-69763-10G01	5		
A-23120-90015	40	A-23337-0Y000	34				
A-23124-NA00A	38	A-23337-0Y000	35				
A-23124-NA00A	39	A-23338-M4900	34				
A-23127-L2915	40	A-23338-M4900	35				
A-23127-NA00A	38	A-23340-0Y000	34				
A-23127-NA00A	39	A-23340-0Y000	35				
A-23128-99415	41	A-23341-43G00	34				

No. PE-TD27-ⅡE

2003年12月　発行
2005年１月　改訂
2005年４月　改訂
2006年５月　改訂
2006年７月　改訂

TCM株式会社
本　社　大阪市西区京町堀１－１５－１０
発　行　ＴＣＭテクノ株式会社

ISSUED : December, 2003
REVISED : January, 2005
REVISED : April, 2005
REVISED : May, 2006
REVISED : July, 2006

TCM CORPORATION
INTERNATIONAL MARKETING DIVISION: 1-15-5, Nishi-shimbashi, Minato-ku, Tokyo
105-0003, Japan
FAX: Japan +81-3-35918152, 3-35918153

無断で転載・複製を禁ず
All rights reserved.

I-0607001(H) Printed in Japan